SANYO

Service Manual

Compact Disc Audio Component System with Wireless Remote Control

DC DJ1 (EUROPE)

PRODUCT CODE No.
132 340 40

Specifications

Tuner Section

FM

Frequencies received	87.50 ~ 108.00 MHz
DIN 26dB Quiet Sensitivity (mono)	1 dBμV/75Ω
S/N ratio	70 dB (mono, 60 dBμ input)
Harmonic distortion	0.1 % (mono, 1 kHz)
Stereo separation	50 dB (1 kHz)
Image frequency interference ratio	90 dB

AM

Frequencies received	522 ~ 1611 kHz
Pratical sensitivity (included antenna)	320 μV/m
S/N ratio	55 dB
Image frequency interference ratio	40 dB
Selectivity	38 dB
IF interference ratio	70 dB

Amplifier Section

Output power (Front)	40 W (T.H.D 0.9 %)
Input sensitivity/impedance	
PHONO	2.5 mV/47 kΩ
DAT/VCR	200 mV/30 kΩ
AUX	200 mV/30 kΩ

DECK Section

Motor	DC motor (DECK 1 and DECK 2)
Head	Hi-B hard permalloy head (DECK 1 playback head, DECK 2 recording head) Ferrite head (DECK 2 erasing head)
Fast-forward/rewind time	Approx. 110 sec. (C-60 tape)
Tracks	4-track, 2-channel stereo
S/N ratio (playback)	50 dB
Frequency response	40 Hz ~ 16 kHz (metal tape)
Wow and flutter	0.08 % (WRMS)

CD Player Section

Frequency response	20 Hz ~ 20 kHz
Harmonic distortion	Less than 0.04 % (1 kHz)
S/N ratio	95 dB
Wow and flutter	Below measurable limits
Optical pickup	3-beam laser
Error correction	CIRC
Sampling frequency	44.1 kHz
D/A conversion	16-bit linear
Filter	Digital filter

General

Power requirements	AC: 220 V, 50 Hz
Power consumption	240 W
Dimensions (WxHxD)	360x455x320 mm
Weight (approx.)	12.9 kg

Specifications and design are subject to change without notice.

REFERENCE No. WM-570223

CONTENTS

Safety Certification 3
CD Player Disassembly Procedures 4
Removing the Disc Tray 4
Removing the Mechanism 4
Note for Assembling Disc Tray 4
CD Player Block Diagram 5
CD Player Adjustment Points 5
CD Player Adjustment Procedures 6
Before Checking or Adjusting CD Player 6
Free Run Frequency Adjustment 6
Setting of Initial Position of Volume 6
Focus Offset Adjustment 6
Tracking Offset Adjustment 6
Linear Motor Offset Adjustment 6
E/F Balance Adjustment 6
Kick Gain Adjustment 6
Adjustment of Focus/Tracking Gain 7
Focus Gain Adjustment 7
Tracking Gain Adjustment 7
Confirming Jitter and HF Level 8
Adjustment of Turntable Height 8
Diffraction Grid Adjustment 8
CD Player Mechanism Exploded View & Parts List 10
Block Diagram (Main Unit Section) 11
System Block Diagram (Function Section) 12
M-COM (LC6554H) System Block Diagram 13
Caution on RF Adjustment 14
System Clock Adjustment 14
FM Tuner Alignment 14
AM Tuner Alignment 15
Cassette Deck Electrical Adjustment 16
Before Adjustment 16
Measuring Instruments Required 16
Switch Positions 16
Normal Tape Speed Adjustment 16
High Speed Tape Speed Adjustment 16
Head Azimuth Adjustment 16
Playback Sensitivity Adjustment 17
FL Meter Sensitivity Adjustment 17
Recording Bias Level Adjustment (DECK2) 17
Cabinet Exploded View & Parts List 18
Cassette Deck Mechanism Exploded View & Parts List 21
P.C.Board Parts List 23
Wiring Diagram (CD Player Section) 51
Wiring Diagram (Power Main Section) 52
Wiring Diagram (Main Unit Section) 53
Schematic Diagram (Tuner Section) 55
Schematic Diagram (Deck/Function/Front Control Section) 57
Schematic Diagram (Deck/Function Section) 59
Schematic Diagram (CD Player Section) 61
Schematic Diagram (Main Power Section) 63
IC Block Diagram 64
IC & Transistor Lead Identification 73

SAFETY CERTIFICATION

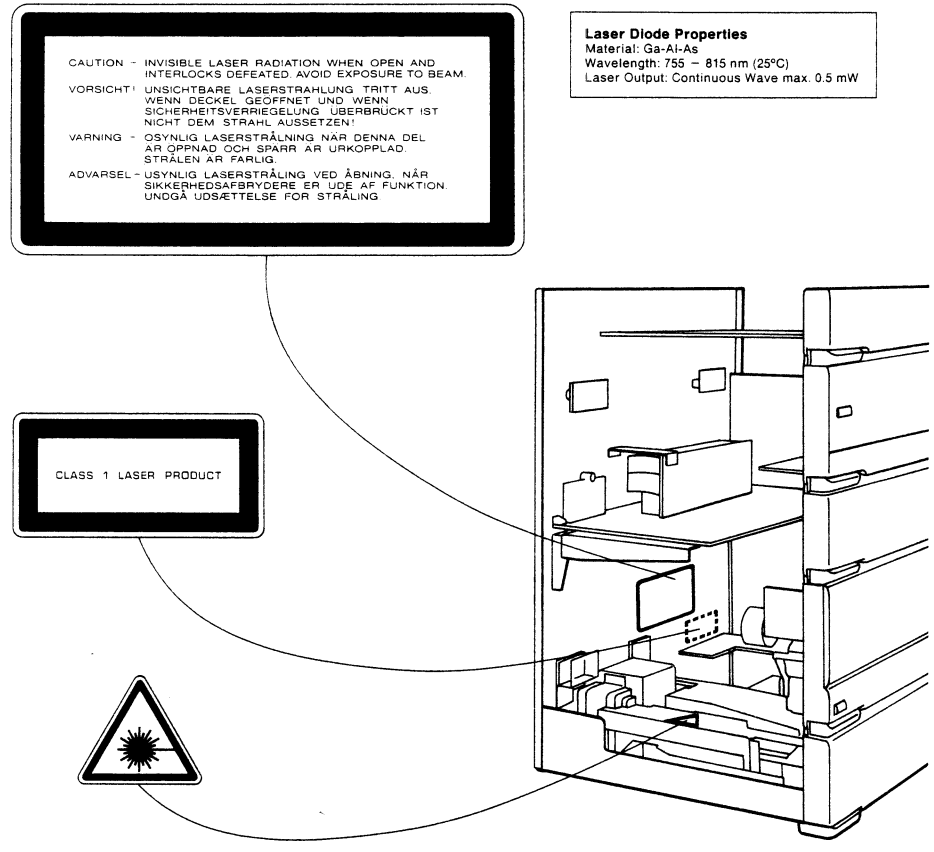

CAUTION – USE OF CONTROLS OR ADJUSTMENTS OR PERFORMANCE OF PROCEDURES OTHER THAN THOSE SPECIFIED HEREIN MAY RESULT IN HAZARDOUS RADIATION EXPOSURE.

THE UNIT SHOULD NOT BE ADJUSTED OR REPAIRED BY ANYONE EXCEPT QUALIFIED SERVICE PERSONNEL.

BEFORE USE

CD PLAYER SECTION

Using a flat-blade screwdriver, turn the transport fixing screw on the bottom panel about 90° clockwise

- When transporting the unit again, such as when moving, remove the disc then turn the fixing screw about 90° counterclockwise.

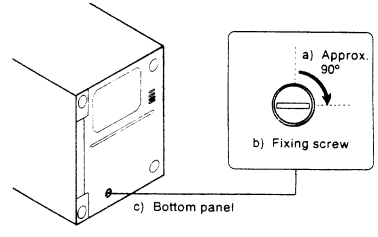

CD PLAYER DISASSEMBLY PROCEDURES

REMOVING THE DISC TRAY

1. Push the POWER button to switch the power on and push the OPEN/CLOSE button to open the Disc Tray.
2. Push the POWER button to switch the power off while the Disc Tray is open.

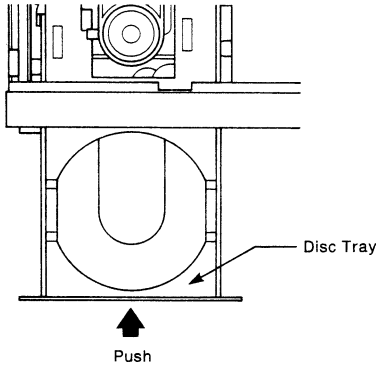

3. Now remove the Disc Tray from the cabinet while pressing the tab in the direction of the arrow in the diagram below.

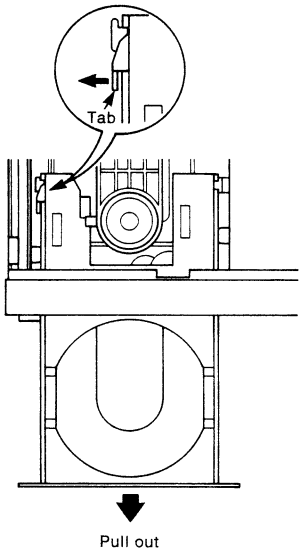

REMOVING THE MECHANISM

1. Take out the four screws (1 ~ 4 in the diagram below) with which the mechanism is mounted in place and remove the mechanism.

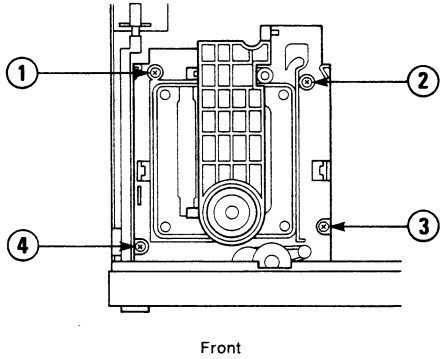

NOTE FOR ASSEMBLING DISC TRAY

1. Place the Disc Tray lever as illustrated and assemble the disc tray.

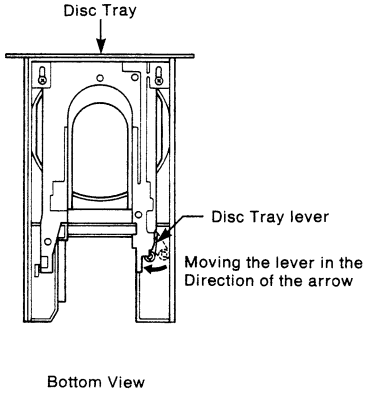

CD PLAYER BLOCK DIAGRAM

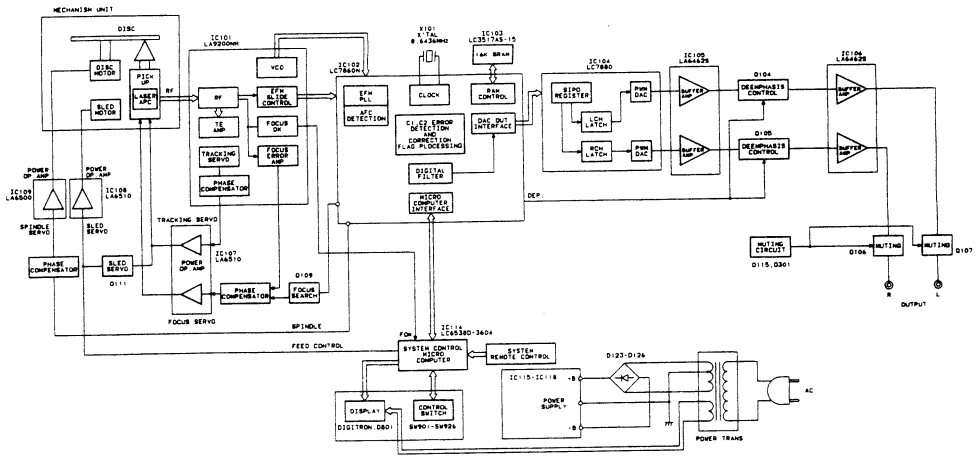

CD PLAYER ADJUSTMENT POINTS

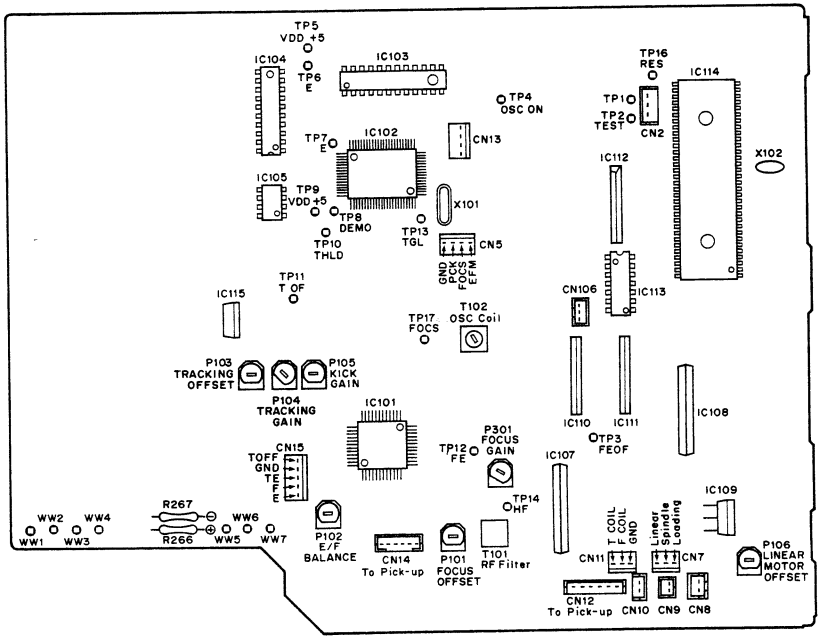

CD PLAYER ADJUSTMENT PROCEDURES

BEFORE CHECKING OR ADJUSTING CD PLAYER

1. Procedures for all adjustments for the CD player from start to finish are described below.
2. If no problems are found after each item is checked when the pick-up is replaced, there is no need to adjust all items again.

FREE RUN FREQUENCY ADJUSTMENT

1. Connect the frequency counter to VCO test terminal (CN5) **PCK** test pin and to **GND.** (Use a 10:1 probe.)
2. Short the test point **TP4** (OSC ON) pin to **GND.**
3. Push the POWER button to switch the power on and push the STOP button.
4. Adjust the OSC coil T102 using a plastic screwdriver until the frequency counter indicator reads 4.3218MHz ±10kHz.

SETTING OF INITIAL POSITION OF VOLUME

1. Set the variable resistors to the initial positions listed below:

   P101 (FOCUS OFFSET) ..... Mechanical Center
   P102 (E/F BALANCE) ..... Mechanical Center
   P103 (TRACKING OFFSET) ..... Mechanical Center
   P104 (TRACKING GAIN) .. At the position of 45° in the clockwise from the Mechanical Center
   P105 (KICK GAIN) ..... Mechanical Center
   P106 (LINEAR MOTOR OFFSET) .. Mechanical Center
   P301 (FOCUS GAIN) ..... At the position of 45° in the clockwise from the Mechanical Center

FOCUS OFFSET ADJUSTMENT

1. Push the POWER button to switch the power on and push the OPEN/CLOSE button to open the Disc Tray and remove the disc.
2. Push the OPEN/CLOSE button to close the Disc Tray and push the STOP button.
3. Connect a DC Voltmeter to the test terminal (CN11) **F** (focus coil) pin and short the test terminal (CN5) **FOCS** pin to **GND.**
4. In this condition check that the DC Voltmeter indicator is in the range −0.5V±50mV, and adjust P101 if it is not.

TRACKING OFFSET ADJUSTMENT

1. Push the POWER button to switch the power on and push the STOP button.
2. Connect a DC Voltmeter to the test terminal (CN11) **T** (tracking coil) pin and short the test point **TP11** (T-OF) pin to **GND.**
3. In this condition check that the DC Voltmeter indicator is in the range 100mV±50mV, and adjust P103 if it is not.

NOTE:
Perform this adjustment once again after adjusting the E/F BALANCE and TRACKING GAIN signals.

LINEAR MOTOR OFFSET ADJUSTMENT

1. Push the POWER button to switch the power on and push the STOP button.
2. Connect a DC Voltmeter to the test terminal (CN7) **LINEAR MOTOR** pin.
3. In this condition check that the DC Voltmeter indicator is in the range 0V±100mV, and adjust P106 if it is not.

E/F BALANCE ADJUSTMENT

1. Place the test disc (Modern Wave Ⅱ) on the Disc Tray, and play the fourth item on the disc. Short the test point **TP2** (TEST) pin to **GND**, and test terminal (CN15) **TOFF** pin to **GND** to turn tracking servo OFF.
2. Connect a DC Voltmeter and an oscilloscope via the low-pass filter like that shown in the illustration below to the test terminal (CN15) **TE** (tracking error) pin.

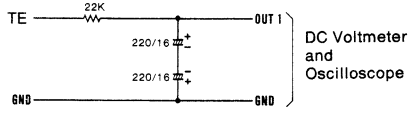

Measurement circuit

3. Adjust P102 so that the DC Voltmeter reading is 0V±50mV (oscilloscope waveform is symmetric to + and − about the zero level).

KICK GAIN ADJUSTMENT

1. Place the test disc (Modern Wave Ⅱ) on the Disc Tray.
2. Set the oscilloscope to NORMAL TRIG., set the EXT. TRIG. pin to external trigger, and input the trigger from test point **TP10** (THLD) pin to the oscilloscope.
3. Next connect test point **TP14** (HF) pin to Channel 1 of the oscilloscope, and connect test terminal (CN15) **TE** pin to Channel 2.
4. Push the POWER button to switch the power on and PLAY the first item on the test disc, and the push the PAUSE button. Now observe the waveforms for **HF** and **TE** with triggers applied from test point **TP10** (THLD) pin. At this point, adjust P105 so that a kick pulse waveform of about 1 to 1.3 tracks as shown in Fig. 1 below is obtained.

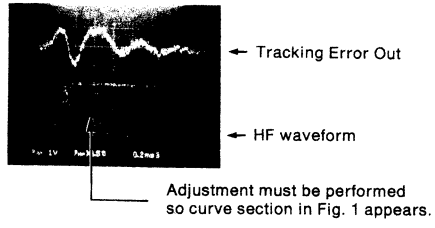

Fig. 1

CD PLAYER ADJUSTMENT PROCEDURES (Continued)

ADJUSTMENT OF FOCUS/TRACKING GAIN

The measurement circuit diagrammed below must be used in order to adjust focus gain and tracking gain correctly.

1. Use IC TA7256P or an equivalent product.
2. Short the interval between **IN** and **SG**, apply 1kHz, 1Vp-p from **SG**, and adjust variable resistor 2kΩ-B so that the **OUT** output is minimum.

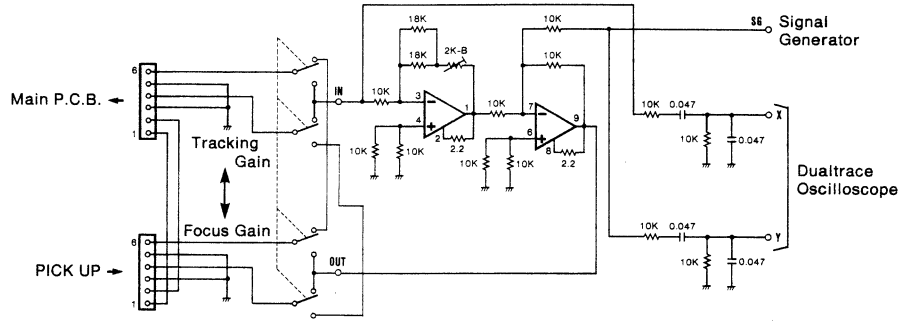

Measurement circuit

FOCUS GAIN ADJUSTMENT

1. Apply P301 to the position of 45° in the clockwise from the center position, and place the test disc (Modern Wave Ⅱ) on the Disc Tray.
2. Connect the measurement tool described in the last section to connector (CN12).
3. Connect the Pick-up Connector Plag to the measurement circuit.
4. Push the POWER button to switch the power on and PLAY the first item on the test disc. Now apply a signal of 900Hz and 0.5Vp-p from the signal generator to the measurement circuit.
5. Set the oscilloscope to X-Y operation, and while observing the lissajous waveform adjust P301 to the point where the phase difference is 90° as shown in Fig. 2 below.

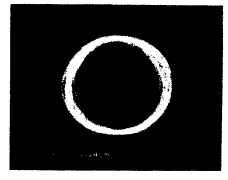

Fig. 2

TRACKING GAIN ADJUSTMENT

1. Apply P104 to the position of 45° in the clockwise from the center position, and place the test disc (Modern Wave Ⅱ) on the Disc Tray.
2. Connect the measurement tool described in the last section to the connector (CN12).
3. Connect the Pick-up Connector Plag to the measurement circuit.
4. Push the POWER button to switch the power on and PLAY the first item on the test disc. Now apply a signal of 1600Hz and 0.5Vp-p from the signal generator to the measurement circuit.
5. Set the oscilloscope to X-Y operation, and while observing the lissajous waveform adjust P104 to the point where the phase difference is 90° as shown in Fig. 2 above.

NOTE:
If these two adjustments are performed, the TRACKING OFFSET must also be adjusted.

CONFIRMING JITTER AND HF LEVEL

If no jitter counter is available, this check does not have to be *have to be performed.*

1. PLAY the fourth item on the test disc (Modern Wave Ⅱ).
2. Connect an oscilloscope to the test point **TP14** (HF) pin, and check that its HF level is in the range 1.8Vp-p ~ 3.3Vp-p.
3. Connect a jitter counter to test terminal (CN5) **EFM** pin, and check that the 3T jitter value is less than 20ns. (Window width: 600ns ~ 850ns, Set Level: 2.5V)
4. Now PLAY the tenth item on the test disc and check that the jitter value is less than 20ns again.
5. If the results of the above procedure are not satisfactory, the Pick-up is damaged.

ADJUSTMENT OF TURNTABLE HEIGHT

This adjustment must be performed when the Spindle Motor is replaced.

1. The turntable should be mounted so that its upper surface is 13.75mm±0.1mm above the surface of the chassis.

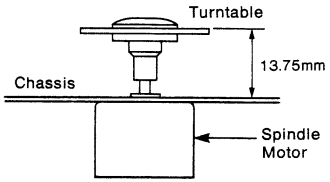

2. Place the test disc (Modern Wave Ⅱ) on the turntable.
3. Connect a DC Voltmeter and an oscilloscope via the low-pass filter shown below to test terminal (CN11) **F** (focus coil) pin.

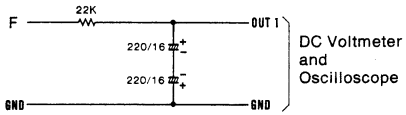

Measurement circuit

4. Push the POWER button to switch the power on and PLAY the First and Last Track No. on the disc.
5. If the DC Voltmeter reading is not in the ranges 0V±0.2V for inner tracks and 0V±0.35V for outer tracks, then the turntable height must be readjusted. Raise the turntable higher if the DC Voltmeter indicator is on the plus (+) side, and lower it if it is on the minus (−) side. (With this circuit 1V represents movement of approximately 0.55mm ~ 0.65mm.)

DIFFRACTION GRID ADJUSTMENT

This set uses a three-beam laser pick-up system. Adjusting the diffraction grid means adjustment so that beams E and F are in position with respect to the main beam as shown in the diagram below on the bit streams.

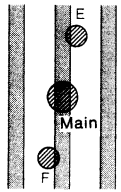

The adjustment procedure involves arranging the three beams in a straight line along the same bit stream and then adjusting them to specified positions.

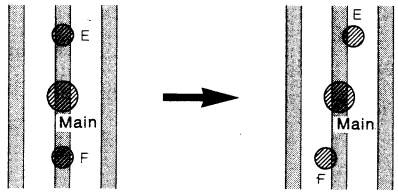

The adjustment steps are detailed below. These are very fine adjustments so great care should be exercised in this.

1. Push the POWER button to switch the power on and push the STOP button.
2. Short test point **TP2** (TEST) pin to the **GND**, and then short test terminal (CN15) **TOFF** pin to **GND** to turn the tracking servo OFF.
3. Place the test disc YEDS7 on the Disc Tray, and push the PLAY button.
4. In this state, connect the **E**-beam output of test terminal (CN15) to Channel 1 of the oscilloscope and **F**-beam output of test terminal (CN15) to Channel 2, and now observe the lissajous waveform on the oscilloscope.
5. When the disc begins to rotate a waveform will appear on the oscilloscope. While observing this waveform, move the Linear Motor in the direction of the arrow by hand to send the pick-up to the outer edge.

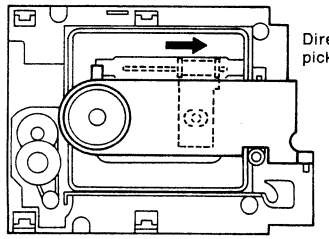

6. When the pick-up approaches the outer edge, the waveform on the oscilloscope will suddenly disappear, and if it is now Pushd further outwards there will be points at which waveforms will appear again. These locations are the multiburst signal storage locations. If the disc rotates at high speed at this time, perform this step once again.

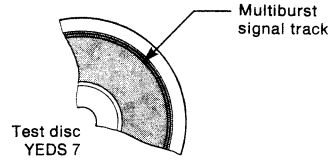

7. Set the oscilloscope to X-Y operation to bring up the waveforms. Insert the adjustment tool in the diffraction grating adjustment hole on the pick-up, and rotate the adjustment tool to right and left. The waveform should be almost a straight line with a phase difference of 0° as shown in Fig. 3 below. This indicates that the beams are arranged in one straight line. The waveform in Fig. 4 indicates that the beams are not arranged along the same stream.

Fig. 3

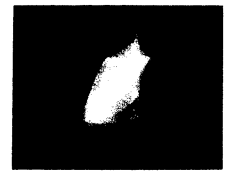

Fig. 4

NOTE:
It is important to turn the adjustment tool only a little at a time. If it is rotated too far, the beams will be pushed over into neighboring streams.

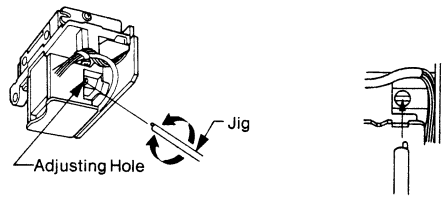

NOTE:
When inserting the adjustment pole into the adjustment hole, first place the disc mechanism with the decorate panel facing to your left, insert the small this tip of the pole facing to your right and turn the pole clockwise.
If the tip is inserted facing to your left and turned clockwise, the adjustment position of the diffraction grid moves in the reverse direction.

8. Next, when the waveform in Fig. 3 is obtained, turn the adjustment tool clockwise from that position at which the waveform in Fig. 3 appeared and adjust so that the waveform is a straight line with a phase difference of 180°. (See Fig. 5)

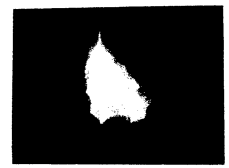

Fig. 5

9. Once the state indicated by the waveform in Fig. 5 is obtained, hold the STOP button down temporarily, and remove the connection between test point **TP2** (TEST) pin and the **GND** as well as that between test terminal (CN15) **TOFF** pin and **GND.**
10. Next, push the PLAY button, and set the oscilloscope in the DUAL MODE so that both E and F outputs can be seen. Set the DISPLAY TIME to 5μs. Now, adjustment is complete if the waveforms shown below in Fig. 6 (Channel 1 trigger) are obtained.

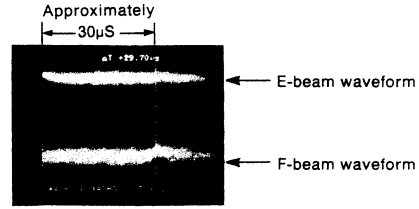

Fig. 6

NOTE:
Diffraction grating adjustment is performed for a single pick-up, so if the following checks are performed adjustment is unnecessary.

a. PLAY the fourth item on the test disc (Modern Wave Ⅱ CA35-1045, Toshiba-EMI), turn the tracking servo OFF, and check that the waveform is linear with a phase difference of 180°.
b. Next, apply tracking servo, and if the waveforms shown in Fig. 6 are obtained then adjustment is unnecessary.
c. If this adjustment has been made, check other adjustment items.

CD PLAYER MECHANISM EXPLODED VIEW & PARTS LIST

Ref. No.	Part No.	Description	Q'ty
CD MECHANISM			
	620 125 8424	Wire Band	3
1	620 062 6200	Pick-up Assy 88 BS	1
2	620 183 4871	Holder Bobbin Assy	1
3	620 183 4888	Bobbin Assy	1
4	620 030 4290	Spindle Motor (Spindle) [M101]	1
5	620 183 4864	Holder Sensor Assy	1
6	620 051 4316	Screw 3X10	3
7	620 081 6069	Chassis Assy	1
8	620 121 6448	York Center	2
9	620 183 4895	York Side Assy	2
10	620 122 6324	Screw Washer	2
11	620 123 0116	Set Screw V-Cone 2X4	1
12	620 124 3321	Cushion	1
13	620 126 4104	Turntable	1
14	620 133 4104	Shaft Pick-up	2
15	620 015 3843	Leaf Switch (Open/Close) [SW101]	1
16	620 030 4108	Motor (Lid/Pick-up) [M102]	1
17	620 083 2878	Gear Rack Assy	1
18	620 188 4258	Table Load (Disc Tray)	1
19	620 184 9592	Table CD Assy	1
20	620 117 1280	Chassis (Load)	1
21	620 119 2223	Holder Disc	1
22	620 121 6493	York Magnet	1
23	620 122 9738	Screw, Bind Hd. Tapping-B, +M3.0X8	2
24	620 124 3437	Cushion Rubber	2
25	620 124 3444	Cushion Rubber	2
26	620 124 3628	Cushion Flap	1
27	620 184 9905	Pad Disc (Felt)	4
28	620 125 0145	Cushion Table Load	1
29	620 125 1005	Washer	1
30	620 127 9597	Gear Pulley	1
31	620 127 9603	Gear Pinion	1
32	620 128 6816	Belt	1
33	620 129 5993	Flap Disc Cramp	1
34	620 131 9835	Lever Table Load	1
35	620 133 4241	Shaft Damper	1
36	620 136 0769	Guide Table Load	2
37	620 138 0088	Spring Damper	1
38	620 139 2043	Spring Flap	1
39	620 139 4672	Spring Table CD	4
40	620 184 3026	Magnet Disc Clamp	1
41	620 192 6606	Pad Disc Hold	1
42	620 192 6613	Pad Damper	1
51	411 099 0701	SCR PAN PCS 1.7X3	2
52	411 020 7700	SCR S-TPG BRZ 3X6	1
53	411 020 8004	SCR S-TPG BRZ 3X8	1
54	411 021 0601	SCR S-TPG BIN 2X5	2
55	411 030 6403	SCR BIN 2X5	2
56	411 099 9407	SCR S-TPG BRZ 2.6X8	2
57	411 021 0304	SCR S-TPG BIN 2X4	1
58	411 021 0908	SCR S-TPG BIN 2X6	1
59	411 031 0905	SCR BIN 2.6X4	2
60	412 026 0108	SPECIAL SCREW	1
61	412 024 8700	SPECIAL SCREW	4
62	411 015 8903	RING E 2	1

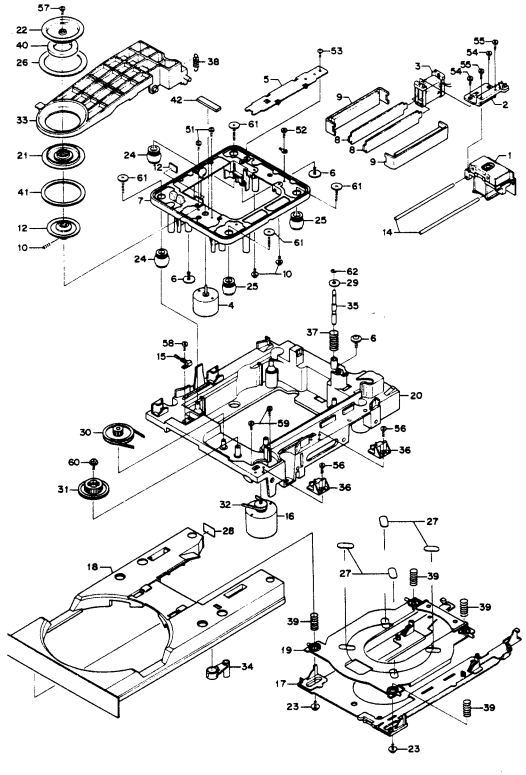

NOTES:

1. Parts order must contain Model Number, Part Number and Description.
2. Ordering quantity of screws and resistors must be multiple of 10 pcs.

BLOCK DIAGRAM (Main Unit Section)

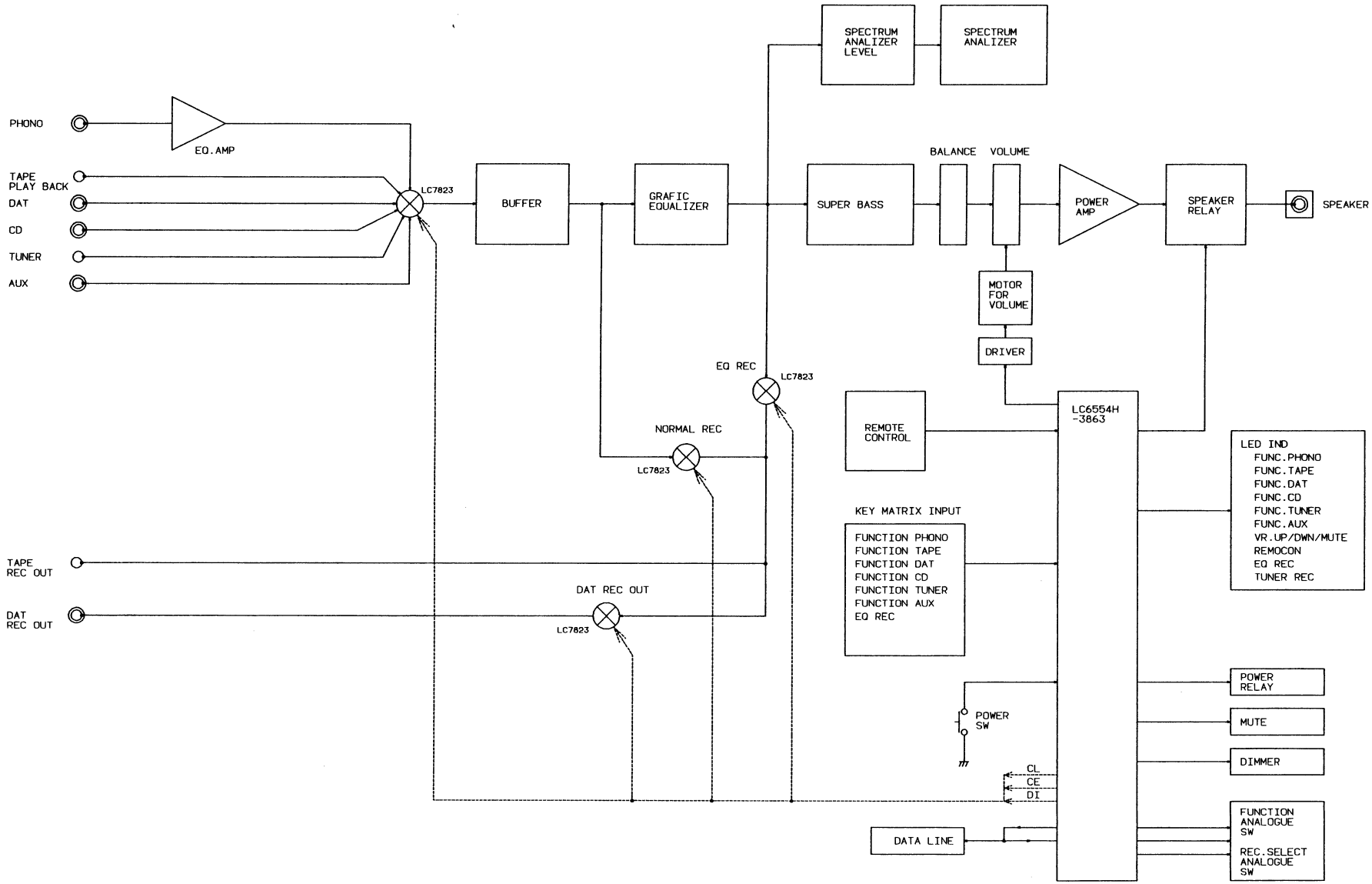

SYSTEM BLOCK DIAGRAM (Function Section)

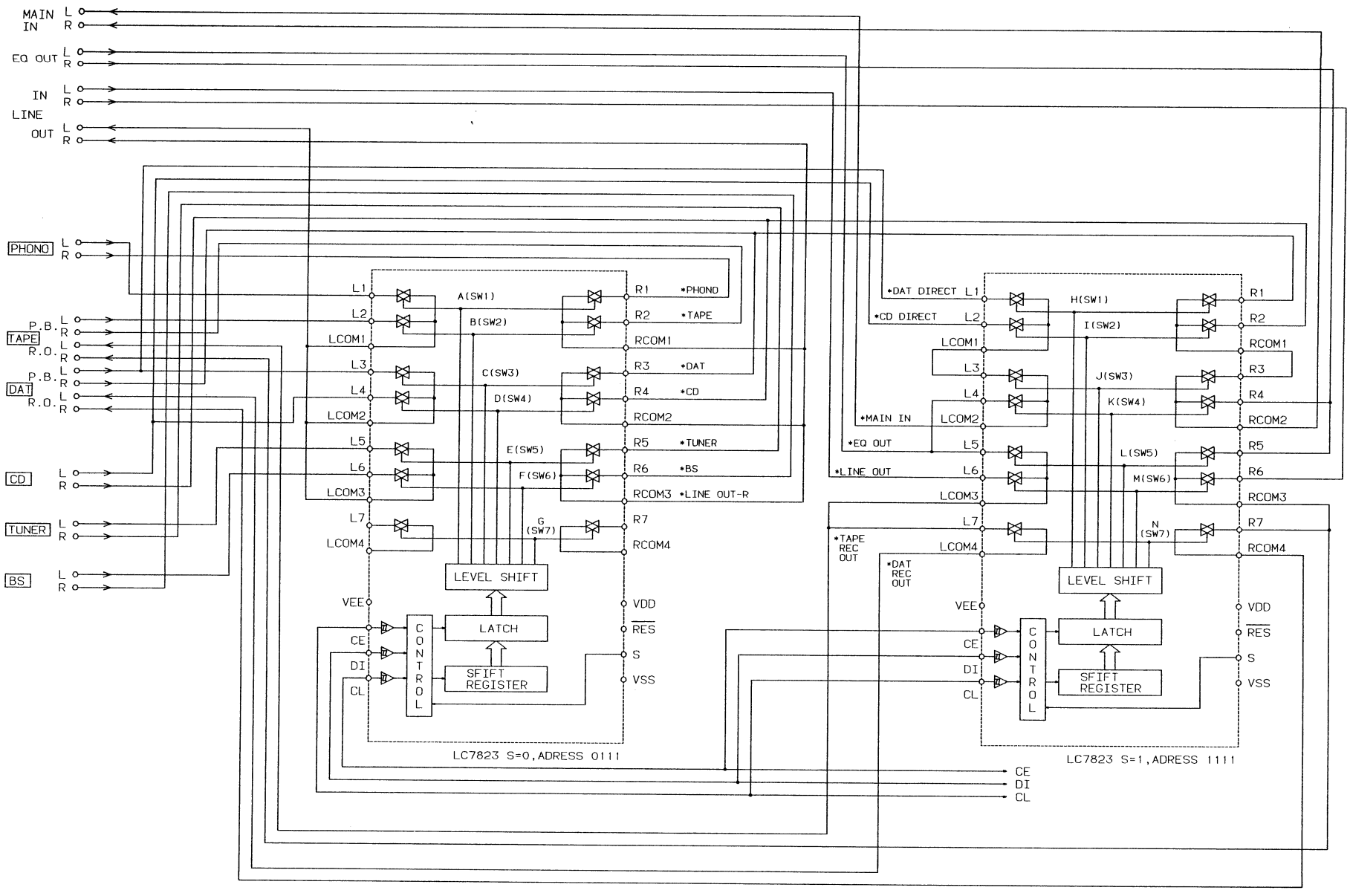

SYSTEM BLOCK DIAGRAM (Deck Function Section)

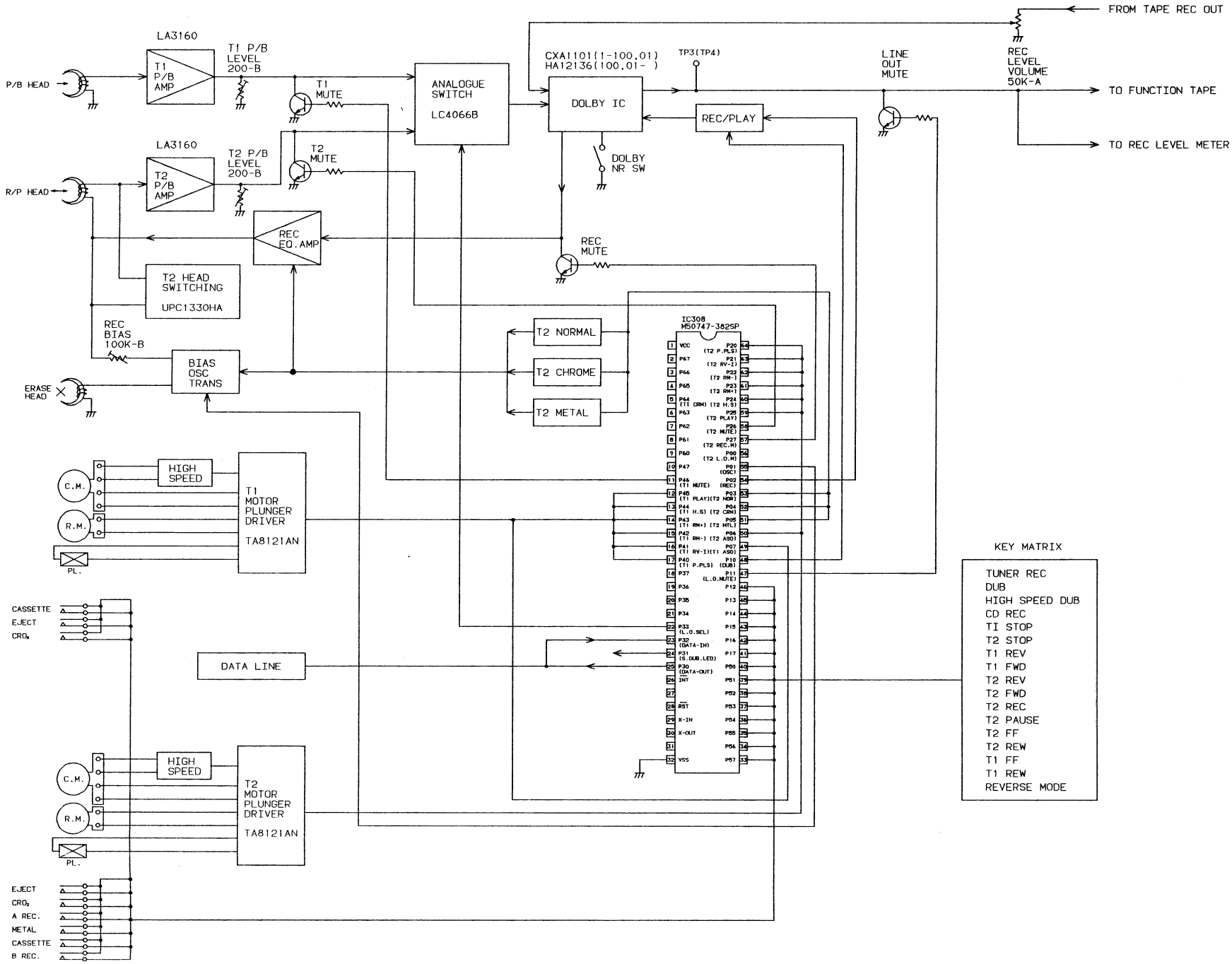

CAUTION ON RF ADJUSTMENT

This model uses a microprocessor for memory preset control for the various bands.
This function has been used to preset frequency points for the different bands to permit adjustment and make it possible to check the function of the microprocessor. To use this supplemental function, ground initialize point jumper wire JM826 for 1 second before beginning adjustment. The following table shows the initially preset frequencies.

Band	Memory											
	1	2	3	4	5	6	7	8	9	10	11	12
FM-1[MHz]	87.5	108.0	88.0	98.0	108.0	90.0	87.6	107.9	87.5	87.5	87.5	87.5
AM [kHz]	522	1611	603	1404	999	522	522	522	522	522	522	522

SYSTEM CLOCK ADJUSTMENT

Since this adjustment sets standard time for the total system, be sure to adjust before operation.

1. Connect the TP811 to the ground (The FL indicator goes out.)
2. Connect the Frequency Counter between the TP810 and ground.
3. Adjust the TC804 until the Frequency Counter reads 65.536kHz ±0.1Hz.
   (Avoid the minus " − " disparity as much as possible in case the clock lags behind.)
4. After the adjustment, Disconnect the TP811 from the ground and the original mode is returned.

FM TUNER ALIGNMENT

FM ALIGNMENT − FUNCTION switch to FM ST/MUTE position.
Note: It is almost unnecessary to adjust coil in Front End as perfectly adjusted

ITEM	GENERATOR	DIAL SETTING	INDICATOR	PROCEDURE
1. CENTER VOLTAGE& DETECTOR ADJUSTMENT (MINIMUM T.H.D.)	Connect FM RF signal generator through FM Dummy Antenna to FM Antenna terminals. Set generator output level to 60dBμV at 98MHz±2kHz.	Set Preset STATION button to "4" position. Set to 98MHz. Set FM MODE switch to MONO.	Connect DC Voltmeter across TP804 and TP805.	Adjust FM DET 1st Coil (T806) until DC Voltmeter reads 0V ±50mV.
			Connect Harmonic Distortion Analyzer to DAT OUT.	Adjust FM DET 2nd Coil (T807) for minimum gain and best linearity.
Note: Repeat Step 1 (FM DET 1st Coil T806) and 2 (FM DET 2nd Coil T807) until optimum alignment is reached.				
2. FM AUTO STOP ADJUSTMENT	Same as above. Adjust attenuator output level for 16dBμV.	Same as above.	Front panel TUNED Indicator Display.	Set FM MODE Switch to ST/MUTE. Adjust P801 until the TUNED Indicator partly light up.
Note: Decrease the output level of ATT and confirm that the wave form disappears. Increase the output level of ATT again and confirm that the input level meets the specifications sufficiently when the wave form has appeared.				
3. FM STEREO SIGNAL SEPARATION CONTROL	Connect FM Stereo SG to FM Antenna terminals. Set generator output level to 60dBμV at 98MHz stereo signal (1kHz-90%, Pilot-10%) from LEFT channel.	Same as above	Connect AC VTVM and Oscilloscope. to (Right Channel) DAT OUT.	Adjust P803 for minimum output and checking the STEREO Indicator light up.
	Same as above for RIGHT channel.		Connect AC VTVM and Oscilloscope to (LEFT channel) DAT OUT	

Use a screwdriver with plastic grip for all adjustments.

AM TUNER ALIGNMENT

AM ALIGNMENT − FUNCTION switch to AM position.
Maintain generator output as low as possible for suitable indication.

Note: Perform this alignment after FM Tuner Alignment.

ITEM	GENERATOR	DIAL SETTING	INDICATOR	PROCEDURE
1. AM IF ALIGNMENT	Connect 450kHz Radio IF Genescope output to AM antenna terminal adjust output level to 70dBμV.	Position of non-interference Minimum Frequency.	Connect Radio IF Genescope input to TP807 and ground lead to chassis.	Adjust AM IFT (T805) for maximum gain and best symmetry. Keep signal low enough for noise on response
2. AM RF FREQUENCY COVER ALIGNMENT (1611kHz)	Do not connect generator.	Set Preset STATION button to "2" position. Set to 1611kHz.	Connect DC Voltmeter to TP802 and ground lead to chassis.	Adjust AM OSC (T803) until DC Voltmeter reads 8.0V.
3. (522kHz)	Same as above.	Set Preset STATION button to "1" position. Set to 522kHz.	Same as above.	Check DC Voltmeter for Indication 1.0V ~ 1.5V.
Note: Repeat the adjustments in items 2 and 3. Then, confirm that each voltage becomes 1.3V to 8.0V at receiving frequency of 522kHz to 1611kHz. **(See Table 1)**				
4. AM RF TRACKING ALIGNMENT (603kHz)	Connect Standard Loop Antenna to output terminal of AM RF Signal Generator. Place Loop Antenna 60cm away from Loop antenna (Unit). Generator Setting to 603kHz or 1404kHz. Modulate with 400Hz (30 % modulation).	Set Preset STATION button to "3" position. Set to 603kHz.	Connect AC VTVM and Oscilloscope to DAT OUT.	Adjust AM ANT Coil (T801) for maximum gain output.
5. (1404kHz)		Change Preset STATION button to "4" position. Set to 1404kHz.	Same as above.	Adjust AM ANT Trimmer (TC801) for maximum gain output.
Note: Repeat the adjustments in items 4 and 5. Then, confirm there is no tracking error.				
6. AM AUTO STOP SENSITIVITY ADJUSTMENT	Change generator setting to 999kHz and output level to 60dBμV/m.	Set Preset STATION button to "5" position. Set to 999kHz.	Front Panel TUNED Indicator Display.	Adjust P802 until the TUNED Indicator partly light up.

Use a screwdriver with plastic grip for all adjustments.

AM Frequency Cover Range
Tuning Voltage Value at TP802
(Table 1)

	Minimum	Typical	Maximum
522kHz	1.0V	1.3V	1.5V
1611kHz	7.0V	8.0V	9.0V

CASSETTE DECK ELECTRICAL ADJUSTMENT

BEFORE ADJUSTMENT

It the tape surface which contacts the head, the capstan, and the pinch roller, etc., is stained, it will cause untable running of the tape, wow and flutter, imperfect recording and erasing, deterioration of tonal quality, and the tape jam around the capstan, etc. Occasionally clean each part as follows;

1. Cut off power
2. Open the cassette lid.
3. Wipe the head, the capstan, and the pinch roller with a cotton swab. If they are excessively stained, clean them with the swab soaked in absolute alcohol or cleaning liquid on the market.

MEASURING INSTRUMENTS REQUIRED

- Dualtrace Oscilloscope
- AC VTVM (AC voltmeter with high impedance)
- Frequency Counter
- Signal Oscillator
- Test Tapes
  - 10kHz Test Tape (Example: TEAC MTT-114) for Azimuth Adjustment
  - 3kHz Test Tape (Example: TEAC MTT-111) for Normal Tape Speed Adjustment
  - 1.5kHz Test Tape (Example: A.BEX TCW-211) for Double Tape Speed Adjustment
  - 400Hz Test Tape (Example: TEAC MTT-150) for Playback Sensitivity Adjustment
- Test Tapes for Recording and Playback Operations
  - Normal Tape (Example: TDK AC 223)
  - CrO_2 Tape (Example: TDK AC 512)
  - Metal Tape (Example: TDK AC 712)

SWITCH POSITIONS

Unless especially indicated, set each switch as follows;

- Input Level Volume ..... Center
- Surround Switch ..... OFF
- Dolby NR Switch ..... OFF
- Graphic Equalizer Controls ..... FLAT

NORMAL TAPE SPEED ADJUSTMENT

1. Connect the frequency counter to the Dolby test point TP3 (Left Channel) or TP4 (Right Channel) on the DECK/FUNCTION P.C.Board.
2. Load Deck 1 with a test tape (Example: TEAC MTT-111) and set it in the playback mode.
3. Adjust the potentiometer inside the capstan drive motor, so that the output becomes 3000Hz ±5Hz.
4. Perform the same adjustment for Deck 2.

HIGH SPEED TAPE SPEED ADJUSTMENT

1. Connect the frequency counter to the Dolby test point TP3 (Left Channel) or TP4 (Right Channel) on the DECK/FUNCTION P.C.Board.
2. Load Deck 1 with a test tape (Example: TEAC MTT-111) and set it in the playback mode.
3. Short circuit Test Point TP1 and GND on the DECK/FUNCTION P.C.Board.
   (The set will be set to the high speed mode.)
4. Adjust VR305 on the DECK/FUNCTION P.C.Board so that the reading on the frequency counter is 6000Hz ±10Hz.
5. Load Deck 2 with the same test tape.
6. Short circuit Test Point TP2 and GND on the DECK/FUNCTION P.C.Board.
7. Adjust VR306, so that the Deck 2 frequency should become as same as Deck 1.

HEAD AZIMUTH ADJUSTMENT

1. Connect the dualtrace oscilloscope and AC VTVM to the Dolby test point TP3 and TP4 (Left and Right channel) on the DECK/FUNCTION P.C.Board.

Then, set the dualtrace oscilloscope as follows:

- MODE ..... CHOP (chopped)
- SOURCE ..... INT (internal), CH1 or CH2
- SWEEP MODE ..... AUTO (automatic)

NOTE:

Adjust the field on the oscilloscope with the VOLT. ADJ. and TIME ADJ.

2. Load Deck 1 with a test tape (Example: TEAC MTT-114) and set it in the forward playback mode.
3. Adjust the forward head azimuth adjustment screw, so that the wave forms become maximum on the oscilloscope and the Right channel wave form overlaps with the Left channel one.
4. Set the unit in the reverse playback mode and adjust the wave forms as described above instructions with the reverse head azimuth adjustment screw as well as the forward.

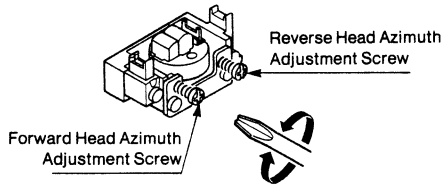

5. Repeat the above several time.
6. Adjust Deck 2 in the same way as for Deck 1.
7. After the adjustment, secure the adjusting screw with paint or glue.

CASSETTE DECK ELECTRICAL ADJUSTMENT (Continued)

PLAYBACK SENSITIVITY ADJUSTMENT

1. Connect the oscilloscope and AC VTVM to the Dolby test point TP3 and TP4 (Left and Right channel) on the DECK/FUNCTION P.C.Board.
2. Load Deck 1 with a test tape (Example: TEAC MTT-150) and set it in the playback mode.
3. Adjust potentiometer VR301 (Left Channel), so that the output level becomes 650mV ±0.5dB.
4. Adjust potentiometer VR302 for the Right channel by following the same procedures as described for the Left channel.

FL METER SENSITIVITY ADJUSTMENT

1. After the playback sensitivity adjustment was mode, playback the test tape (Example: TEAC MTT-150) on Deck 1.
2. Adjust potentiometer VR651 and VR652 (Left and Right channel) so that the Level meter indicates light up 0dB (Red point).

RECORDING BIAS LEVEL ADJUSTMENT (DECK2)

1. Connect the audio signal generator to the Left channel of the DAT/VTR input terminal, and the AC VTVM to the Dolby test point TP3 and TP4 (Left and Right channel) on the DECK/FUNCTION P.C.Board.
2. Load Deck 2 with a normal tape (Example: TDK AC223) and set it in the recording mode.
3. Function switch to the DAT/VTR position.
4. Set the Input Level ATT so that the output level becomes 30mV and feed the signals of 1kHz and 12.5kHz from the audio signal generator into the unit. Then, record the signals on the tape.
5. Playback the recorded signals and adjust potentiometer VR307 for the Left channel, so that the difference in output of the 1kHz and 12.5kHz signals become ±1dB.
6. Adjust potentiometer VR308 for the Right channel by following the same procedures as described for the Left channel.

DECK/FUNCTION P.C.BOARD ALIGNMENT POINTS
(BOTTOM VIEW)

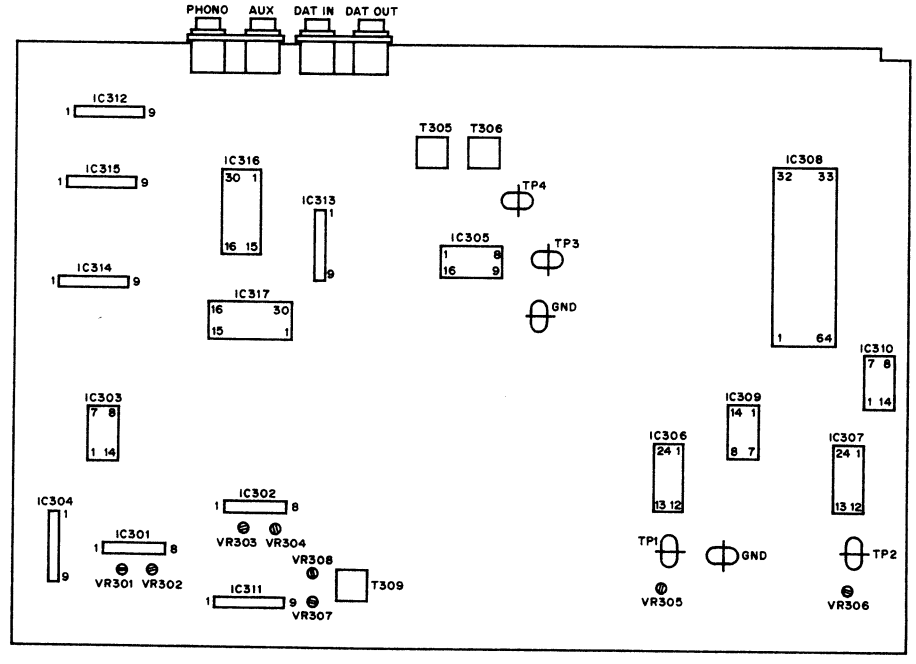

CABINET EXPLODED VIEW & PARTS LIST

Ref. No.	Part No.	Description	Q'ty
PACKAGE			
	620 195 4654	Inner Carton	1
	620 062 0543	Serial No. Sheet	2
	620 189 2239	Pad Shoulder	1
	620 189 2857	Pad (Bottom)	1
	620 189 6732	Patching Sheet	1
	620 189 6749	Sheet Polyethylene	1
ACCESSORIES			
	411 123 3906	SCR TPG BIN 3X10	2
	620 195 7853	Remocon,DJ1MV	1
	620 196 3977	Instruction Manual,E,SWE	1
	620 197 6465	Instruction Manual	1
	620 195 8201	Label,Caution,Bottom	1
	620 195 8218	Label,Caution,Top	1
	620 197 1736	Label,POP,GE,Left	1
	620 197 1743	Label,POP,GE Right	1
	620 197 1767	Label,POP,Deck 1	1
	620 198 6280	Label,R L	1
	620 038 1673	FM Antenna Assy	1
	620 057 8783	Bag Fan	1
	620 113 5312	Stand Loop Antenna	1
or	620 113 5305	Stand Antenna	1
	620 148 5561	Poly Cover 100 x 100	1
CABINET			
	620 054 1992	Label	1
	620 061 2340	Notes (Laser)	1
	620 061 2401	Notes (Laser)	1
	620 061 2418	Notes (Laser)	1
	620 062 0543	Serial No. Sheet	1
	620 189 4011	Tape Double Face	1
	620 125 8424	Wire Band	15
CN2	620 018 1501	Connector 3P Assy	1
CN6	620 018 1495	Connector 3P Assy	1
CN8	620 018 1990	Connector 2P Assy	1
CN9	620 018 1983	Connector 2P Assy	1
CN10	620 018 1976	Connector 2P Assy	1
CN22	620 018 2157	Connector 1P Assy	1
1	⚠ 620 023 7550	Power Cord	1
2	⚠ 620 196 6299	Power Trans,SEV	1
3	⚠ 620 196 6305	Power Trans,SEV	1
4	620 047 3873	Leg	2
5	620 048 2608	Metal Mount (IC)	1
6	620 050 4317	Mount P.C.B.	4
7	620 050 4539	Mount P.C.B	2
8	620 051 3708	Screw Braz. Hd. Tapp.-B. +M3X8	2
9	620 051 4149	Screw C-Tite 4X8 Z1	6
10	620 191 2746	Rivet 3.5	3
11	620 192 0949	Cover Shield	1
12	620 053 1993	Bushing (Antenna)	1
13 ┬	620 195 4661	Assy,Panel,Front	1
├	620 197 9688	Panel,Front	1
├	620 195 3152	Marking Plate,Indicator	1
├	620 196 1522	Window	1
├	620 195 1691	Knob,FM1,FM2	1
├	620 195 1707	Knob,Mono,Stereo	1
├	620 195 1714	Knob,Auto,Manual	1
├	620 195 1721	Knob,AUX	1
├	620 195 4784	Knob,DAT/VCR	1
├	620 188 2551	Plate Dial	1
├	620 188 2599	Panel Control	1
├	620 047 4368	Leg	2
├	620 050 3679	Filter	1
├	620 189 3373	Knob Deck Assy	1
├	620 188 4357	Window	1
├	620 188 4418	Indicator Function	1
├	620 188 4432	Indicator Remote	1
├	620 188 3169	Clear Window	1
├	620 188 3183	Filter	1
├	620 188 4487	Filter	2
├	620 188 4494	Filter Blue	1
├	620 188 4500	Plate	1
├	620 188 4517	Filter FL	1
├	620 105 0936	Reflection ALM	2
├	620 188 3435	Knob FF.REW	3
├	620 188 3466	Knob CD 1	1
├	620 188 3473	Knob CD 2	1
├	620 188 3480	Knob CD 3	1

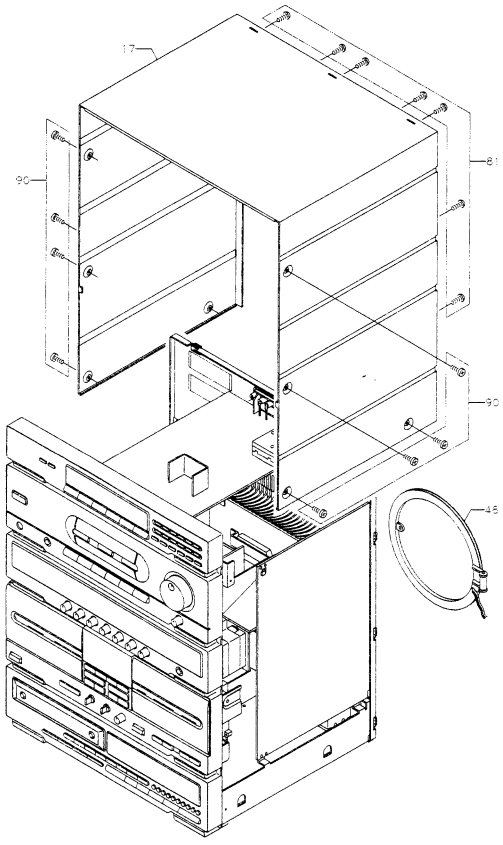

Ref. No.	Part No.	Description	Q'ty
├	620 188 3497	Knob CD 4	1
├	620 188 4753	Knob Timer	1
├	620 188 4760	Knob Preset	1
├	620 189 4356	Knob Mode Down	1
├	620 188 4784	Knob UP	1
├	620 188 4791	Knob AM	1
├	620 188 4807	Knob Function	1
├	620 189 4370	Knob Function Tape	1
├	620 189 4394	Knob Function CD	1
├	620 188 4814	Knob Phono	1
├	620 188 4838	Knob Push	2
├	620 188 4845	Knob Sleep	1
├	620 188 4852	Knob Power	1
├	620 116 3483	Adhesive Sheet	4
├	620 116 4725	Adhesive Sheet	2
├	620 189 4417	Adhesive Sheet	6
├	620 189 4424	Adhesive Sheet	2
└	620 189 4431	Adhesive Sheet	2
14	620 189 2444	Lid Cassette (Left) Assy	1
15	620 189 2451	Lid Cassette (Right) Assy	1
16	620 083 1789	Gear Eject Assy	2

CABINET EXPLODED VIEW & PARTS LIST (Continued)

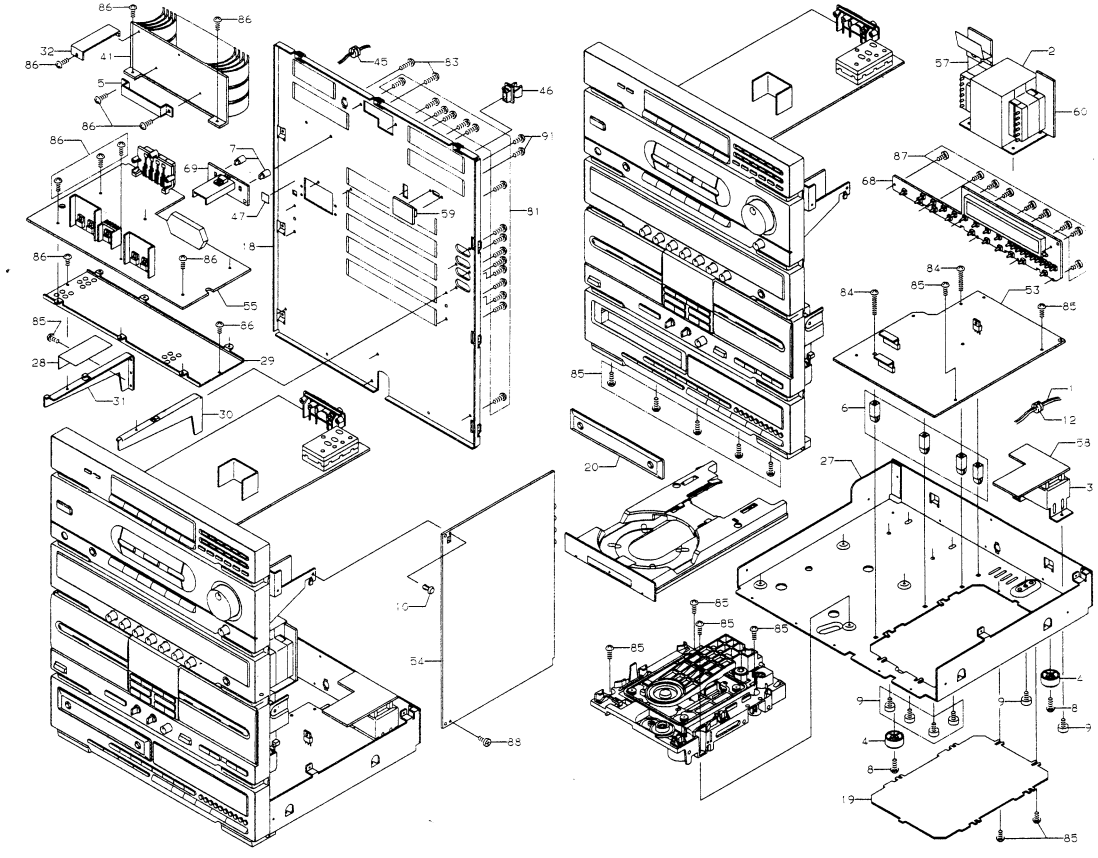

Ref. No.	Part No.	Description	Q'ty
17	620 189 1041	Cover	1
18	620 195 4630	Panel,Rear	1
19	620 189 0525	Bottom Cover	1
20	620 188 3220	Cover Decorate Tray	1
21	620 188 4562	Knob Rotary	8
22	620 188 4579	Knob Volume	1
23	620 188 3428	Knob Rotary	1
24	620 188 3442	Knob Mode	2
25	620 188 3503	Knob Eject Right	1
26	620 188 3510	Knob Eject Left	1
27	620 195 5309	Chassis	1
28	620 196 6176	Shield,Cover	1
29	620 117 6797	Bracket P.C.B. Amplifier	1
30	620 117 6810	Bracket Right	1
31	620 117 6827	Bracket Left	1
32	620 117 6940	Bracket Support	1
33	620 189 1249	Bracket Volume	1
34	620 189 1256	Bracket Cover	1
35	620 189 1263	Fix Cover	1
36	620 189 1270	Bracket P.C.B. Tuner	1
37	620 188 3596	Metal Mount Mode	1
38	620 188 3602	Metal Mount Right	1
39	620 188 3619	Metal Mount Left	1
40	620 191 9790	Bracketmount	1

Ref. No.	Part No.	Description	Q'ty
41	620 189 7746	Plate Heat Sink	1
42	620 123 7658	Sheet	1
43	620 137 9990	Spring Lid Left	1
44	620 138 0002	Spring Lid Right	1
45	620 053 2136	Bushing (Power Cord)	1
46	620 122 2210	Holder Antenna	1
47	620 123 3186	Insulator	2
48	620 028 1966	Loop Antenna	1
51	620 197 9732	Assy,PCB Graphic EQ.	1
52	620 196 3236	Assy,PCB,Front Control	1
53	620 196 5483	Assy,PCB,CD Main	1
54	620 196 3212	Assy,PCB,Deck Function	1
55	620 196 5551	Assy,PCB,Main Power	1
56	620 197 4140	Assy,PCB,Tuner	1
57	620 196 5520	Assy,PCB,Main TRANS-1	1
58	620 196 5537	Assy,PCB,SUB Trans	1
59	620 196 5544	Assy,PCB,Beat Cancel	1
60	620 196 6275	Assy,PCB,Main TRANS-2	1
61	620 190 7223	Deck IND. P.C.B. Assy	1
62	620 190 7230	Volum P.C.B. Assy	1
63	620 190 7247	Dolby Switch P.C.B. Assy	1
64	620 190 7254	Headphone P.C.B. Assy	1
65	620 190 7261	T1 Switch P.C.B. Assy	1

CABINET EXPLODED VIEW & PARTS LIST (Continued)

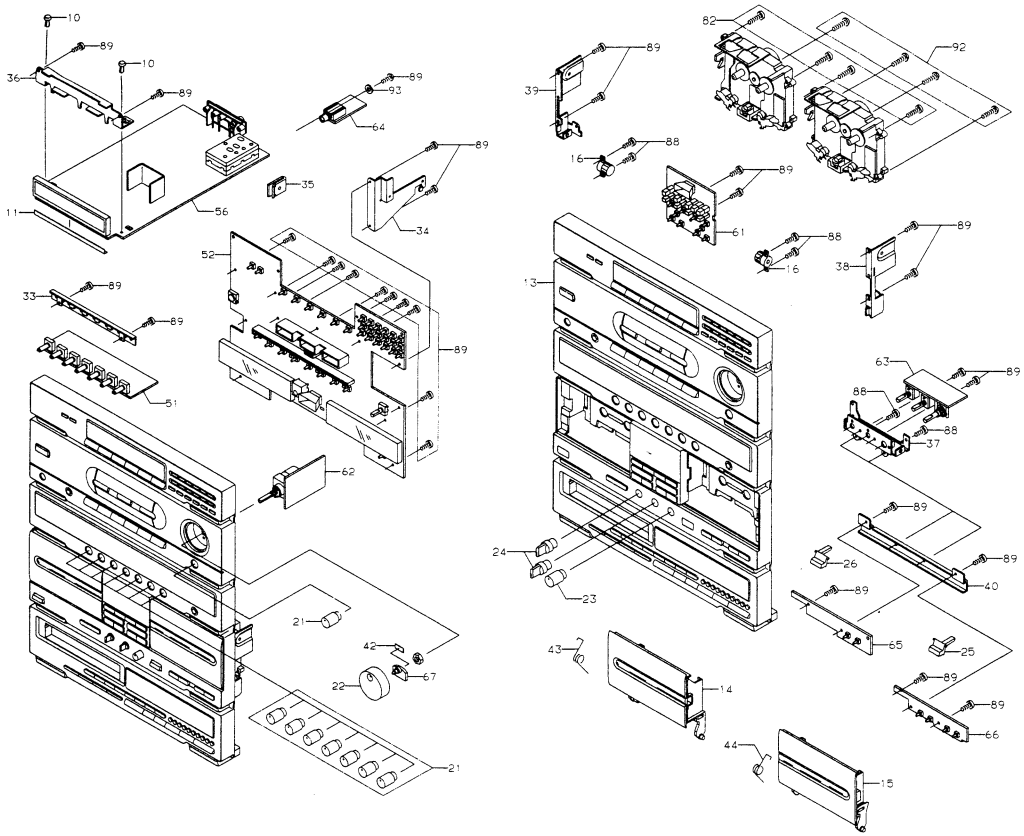

Ref. No.	Part No.	Description	Q'ty
66	620 190 7278	T2 Switch P.C.B. Assy	1
67	620 190 7285	VR IND P.C.B. Assy	1
68	620 190 8008	PCB CD-Control Assy	1
69	620 191 1329	PL.Power P.C.B. Assy	1
81	411 099 9506	SCR S-TPG BRZ 3X10	23
82	411 020 6208	SCR S-TPG BRZ 3X12	4
83	411 020 6406	SCR S-TPG BRZ 3X12	2
84	411 020 7007	SCR S-TPG BRZ 3X20	2
85	411 020 7700	SCR S-TPG BRZ 3X6	14
86	411 020 8004	SCR S-TPG BRZ 3X8	10
87	411 021 1202	SCR S-TPG BIN 2X8	9
88	411 021 2704	SCR S-TPG BIN 2.6X6	7
89	411 021 3107	SCR S-TPG BIN 2.6X8	30
90	411 021 6603	SCR S-TPG BIN 3X8	8
91	411 031 1001	SCR BIN 2.6X4	2
92	411 020 5904	SCR S-TPG BRZ 3X10	4
93	411 092 7806	WASHER Z 3.2X16X1	1

Ref. No.	Part No.	Description	Q'ty

NOTES:

1. Parts order must contain Model Number, Part Number and Description.
2. Ordering quantity of screws and resistors must be multiple of 10 pcs.

PRODUCT SAFETY NOTICE

Each precaution in this manual should be followed during servicing. Components identified with the IEC symbol ⚠ in the parts list and the schematic diagram designate components in which safety can be of special significance. When replacing a component identified with ⚠, use only the replacement parts designated, or parts with the same ratings of resistance, wattage or voltage that are designated in the parts list in this manual. Leakage-current or resistance measurements must be made to determine that exposed parts are acceptably insulated from the supply circuit before returning the product to the customer.

CASSETTE DECK MECHANISM EXPLODED VIEW & PARTS LIST

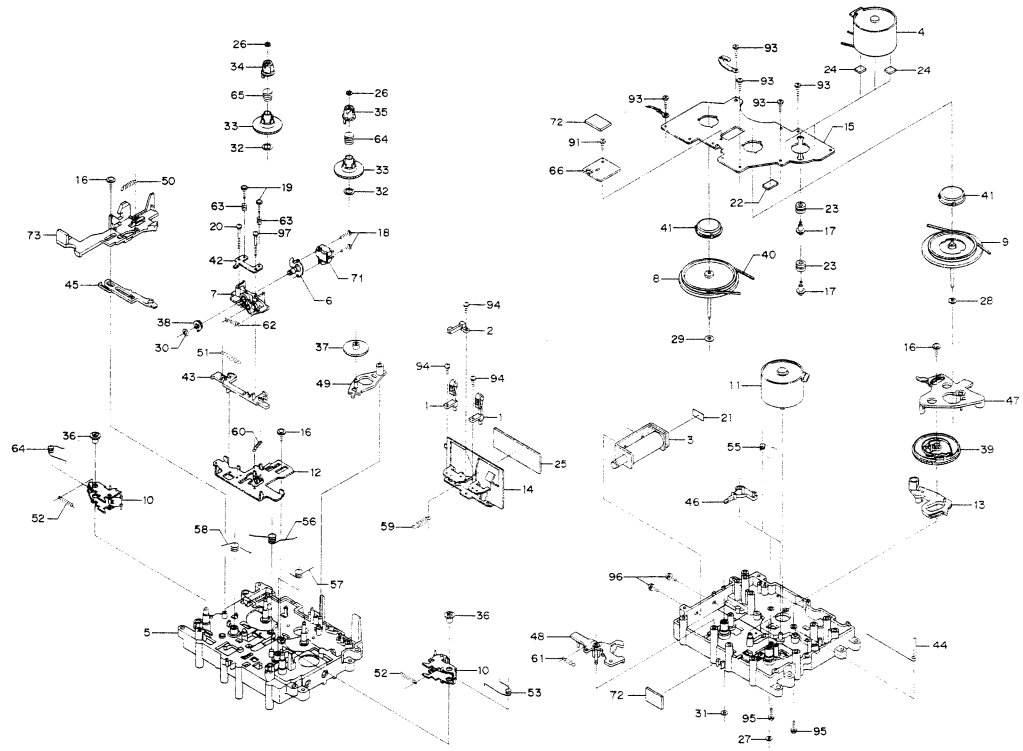

Ref. No.	Part No.	Description	Q'ty
DECK 1 & DECK 2 SIMILAR PARTS			
	620 193 0986	Sheet	2
	620 125 8110	Lug	2
1	620 016 9332	Leaf Switch	4
1	620 016 9332	Leaf Switch	3
2	620 016 9349	Leaf Switch	2
3	620 029 3624	Plunger	2
4	620 030 3835	Motor	2
5	620 081 5857	Chassis Assy	2
6	620 082 2787	Plate Head Assy	2
7	620 082 2848	Head Base Assy	2
8	620 082 7164	Flywheel FWD PB Assy	2
9	620 082 7201	Flywheel REV Complete	2
10	620 083 0539	Arm Pinchroller Assy	4
11	620 191 0483	Gear Motor Assy	2
12	620 084 2471	Base Slide Assy	2
13	620 085 0902	Lever Assist B Assy	2
14	620 119 1332	Bracket Switch	2
15	620 119 1561	Support Flywheel	2
16	620 122 7277	Screw W/Washer + M2.0X6.0	6
17	620 122 9356	Screw Washer + M2.6X1.5	4
18	620 123 0550	Screw + PMS M1.6X6.0	4
19	620 123 0901	Screw Azimuth	4
20	620 123 1038	Screw C Switch M2X20	2
21	620 123 5920	Sheet (Plunger)	2
22	620 123 9072	Cushion	2
23	620 123 9942	Cushion Motor	4
24	620 124 5530	Cushion	4
25	620 124 5950	Cushion	3

Ref. No.	Part No.	Description	Q'ty
26	620 125 1630	Washer M1.5X3.5X0.4	4
27	620 125 1982	Washer, M2.1X4.0X0.25	2
28	620 125 3450	Washer, M2.2X6.0X0.25	2
29	620 125 3870	Washer, M2.6X6.0X0.25	2
30	620 125 4280	Washer CUT, M3.4X6.0X0.4	2
31	620 125 4761	Washer, M2.4X4.5X0.25	2
32	620 125 4846	Washer, M4.1X8.0X0.25	4
33	620 126 6252	Reel Plate	4
34	620 126 6269	Fin Reel Supply	2
35	620 126 6276	Fin Reel Take UP	2
36	620 126 8492	Bush	4
37	620 127 8132	Gear Idler	2
38	620 127 8156	Gear Head	2
39	620 127 8163	Gear Actuate	2
40	620 128 6533	Belt Drive	2
41	620 129 1292	Thrust Flywheel	4
42	620 130 6019	Plate Azimuth	2
43	620 130 6026	Plate Reverse	2
44	620 137 9426	Spring Earth Reel	2
45	620 130 6040	Rod Eject Base	2
46	620 131 8982	Lever Lock Base	2
47	620 131 9002	Lever REV Select	2
48	620 131 9019	Lever Play Start	2
49	620 132 4914	Arm Idler	2
50	620 136 9489	Spring Tension Arm	2
51	620 136 9922	Spring Slide Base	2
52	620 137 4346	Spring Base Head	4
53	620 137 9051	Spring Arm Pinch Right	2
54	620 137 9068	Spring Arm Pinch Left	2

CASSETTE DECK MECHANISM EXPLODED VIEW & PARTS LIST (Continued)

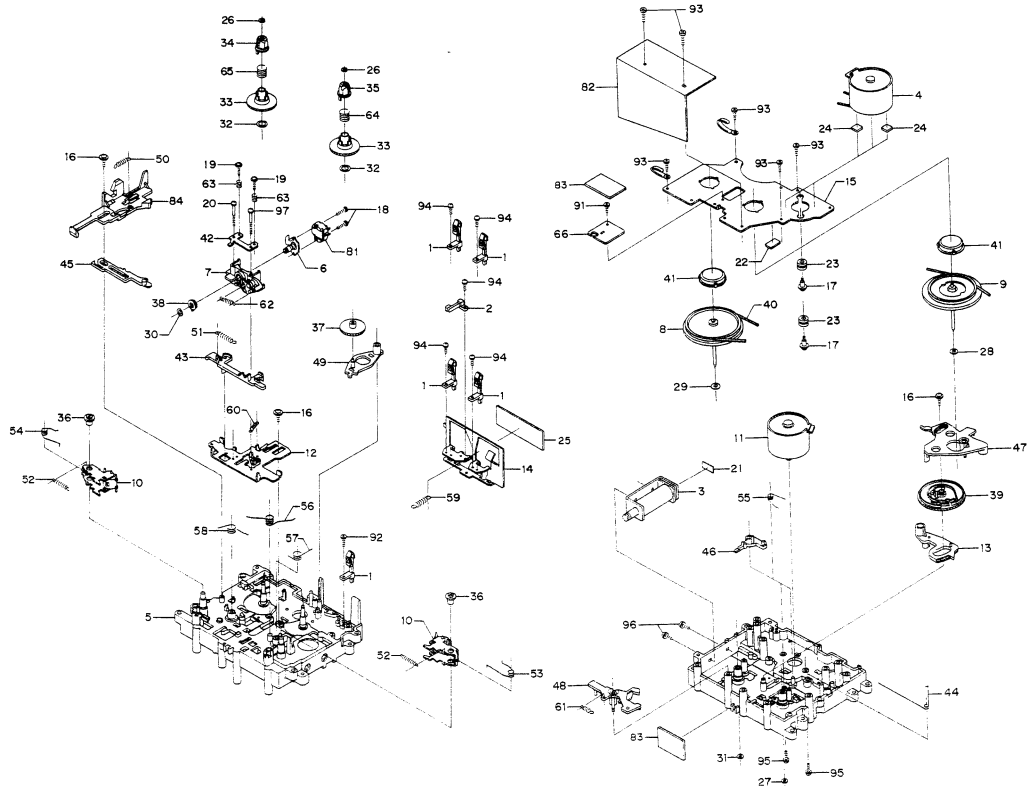

Ref. No.	Part No.	Description	Q'ty
55	620 137 9082	Spring Lever REV SEL	2
56	620 137 9099	Spring Lever Base	2
57	620 137 9358	Spring Earth FWD	2
58	620 137 9365	Spring Earth Reverse	2
59	620 138 9616	Spring Base	2
60	620 139 1077	Spring Lever Base	2
61	620 139 1121	Spring Lever Start	2
62	620 139 1220	Spring Gear Reverse	2
63	620 139 4139	Spring Azimuth	4
64	620 139 4207	Spring Reel FWD	2
65	620 139 4214	Spring Reel Reverse	2
66	620 011 1867	PCB Head	2
91	411 021 0809	SCR S-TPG BIN 2X6	2
92	411 021 1202	SCR S-TPG BIN 2X8	1
93	411 021 1806	SCR S-TPG BIN 2.6X10	11
94	411 044 7205	SCR PAN+SW 2X4	8
95	411 003 8809	SCR PAN+SW 2.6X6	4
96	411 045 5408	SCR PAN+SW 3X5	4
97	411 106 5606	SCR PAN+SW+W 2X20	2

Ref. No.	Part No.	Description	Q'ty
DECK 1 ONLY			
	620 017 6392	Connector 1P Assy [CA71]	1
	620 017 3667	Connector 1P Assy [CA72]	1
	620 018 0979	Connector 3P Assy [CA301]	1
	620 017 9706	Connector 8P Assy [CA304]	1
	620 191 6768	Connector 4P Assy [CA305]	1
71	620 191 7093	PB Rotary Head	1
72	620 124 5103	Cushion	2
73	620 130 6965	Rod Eject	1
DECK 2 ONLY			
	620 017 6392	Connector 1P Assy [CA73]	1
	620 017 3667	Connector 1P Assy [CA74]	1
	620 017 7085	Connector 6P Assy [CA302]	1
	620 191 6751	Connector 2P Assy [CA303]	1
	620 191 6775	Connector 8P Assy [CA306]	1
	620 191 6782	Connector 7P Assy [CA307]	1
81	620 191 7109	RP.E Rotary Head	1
82	620 192 4558	Cover Shield	1
83	620 124 7350	Cushion	2
84	620 130 6033	Rod Eject	1

NOTES:

1. Parts order must contain Model Number, Part Number and Description.
2. Ordering quantity of screws and resistors must be multiple of 10 pcs.

P.C.BOARD PARTS LIST

Ref. No.	Part No.	Description	Q'ty
ASSY,PCB GRAPHIC EQ.			
51	620 197 9732	Assy,PCB Graphic EQ.	1
	620 190 9593	VR 100K SWX2	7
CA311	620 017 6347	Connector 7P Assy	1
IC761	409 167 8803	IC AN7337	1
IC762	409 167 8803	IC AN7337	1
C761	403 164 4608	ELECT 100U M 25V	1
C762	403 164 4608	ELECT 100U M 25V	1
C765	403 050 8000	ELECT 3.3U M 50V	1
C766	403 050 8000	ELECT 3.3U M 50V	1
C767	403 056 8608	POLYESTER 1000P K 50V	1
C768	403 056 8608	POLYESTER 1000P K 50V	1
C769	403 050 8000	ELECT 3.3U M 50V	1
C770	403 050 8000	ELECT 3.3U M 50V	1
C771	403 067 8406	MT-COMPO 0.082U J 50V	1
C772	403 067 8406	MT-COMPO 0.082U J 50V	1
C773	403 050 1605	ELECT 2.2U M 50V	1
C774	403 050 1605	ELECT 2.2U M 50V	1
C775	403 067 7201	MT-COMPO 0.033U J 50V	1
C776	403 067 7201	MT-COMPO 0.033U J 50V	1
C777	403 049 2002	ELECT 1U M 50V	1
C778	403 049 2002	ELECT 1U M 50V	1
C779	403 058 2901	POLYESTER 0.015U J 50V	1
C780	403 058 2901	POLYESTER 0.015U J 50V	1
C781	403 048 5707	ELECT 0.33U M 50V	1
C782	403 048 5707	ELECT 0.33U M 50V	1
C783	403 062 5608	POLYESTER 5600P K 50V	1
C784	403 062 5608	POLYESTER 5600P K 50V	1
C785	403 067 6204	MT-COMPO 0.15U J 50V	1
C786	403 067 6204	MT-COMPO 0.15U J 50V	1
C787	403 059 4102	POLYESTER 2200P K 50V	1
C788	403 059 4102	POLYESTER 2200P K 50V	1
C789	403 067 7904	MT-COMPO 0.056U J 50V	1
C790	403 067 7904	MT-COMPO 0.056U J 50V	1
C791	403 075 4506	CERAMIC 820P K 50V	1
C792	403 075 4506	CERAMIC 820P K 50V	1
C793	403 059 6601	POLYESTER 0.022U K 50V	1
C794	403 059 6601	POLYESTER 0.022U K 50V	1
C795	403 072 8200	CERAMIC 330P K 50V	1
C796	403 072 8200	CERAMIC 330P K 50V	1
C797	403 057 0908	POLYESTER 0.01U K 50V	1
C798	403 057 0908	POLYESTER 0.01U K 50V	1
R647	401 025 7805	CARBON 2.2K JA 1/6W	1
R648	401 025 7805	CARBON 2.2K JA 1/6W	1
R649	401 025 7805	CARBON 2.2K JA 1/6W	1
R650	401 025 7805	CARBON 2.2K JA 1/6W	1
R761	401 026 0607	CARBON 270 JA 1/6W	1
R762	401 026 0607	CARBON 270 JA 1/6W	1
R765	401 025 7805	CARBON 2.2K JA 1/6W	1
R766	401 025 7805	CARBON 2.2K JA 1/6W	1
R767	401 025 7805	CARBON 2.2K JA 1/6W	1
R768	401 025 7805	CARBON 2.2K JA 1/6W	1
R769	401 024 7400	CARBON 10K JA 1/6W	1
R770	401 024 7400	CARBON 10K JA 1/6W	1
R771	401 027 2303	CARBON 560 JA 1/6W	1
R772	401 027 2303	CARBON 560 JA 1/6W	1
R773	401 025 7805	CARBON 2.2K JA 1/6W	1
R774	401 025 7805	CARBON 2.2K JA 1/6W	1
R775	401 026 1307	CARBON 27K JA 1/6W	1
R776	401 017 2801	CARBON 27K JA 1/4W	1
R777	401 026 1307	CARBON 27K JA 1/6W	1
R778	401 017 2801	CARBON 27K JA 1/4W	1
R779	401 025 7805	CARBON 2.2K JA 1/6W	1
R780	401 025 7805	CARBON 2.2K JA 1/6W	1
ASSY,PCB,FRONT CONTROL			
52	620 196 3236	Assy,PCB,Front Control	1
	620 185 3452	Digitron BG-601GK	1
	620 185 3469	Digitron BG-602GK	1
	620 026 9193	Ceramic Resonator	1
	620 030 8083	Lamp	4
	620 198 9410	Reflector	1
	620 062 1007	Tape Double Face 5	
	620 188 4524	Reflector	1
	620 121 2549	Spacer Lamp	1
	620 188 4883	Holder LED	1
	620 189 1324	Cushion FL	2
	620 189 5889	Cushion FL	2
CA308	620 191 6799	Connector 8P Assy	1

Ref. No.	Part No.	Description	Q'ty
CA309	620 191 6805	Connector 3P Assy	1
CA313	620 191 6843	Connector 3P Assy	1
CA314	620 191 6850	Connector 7P Assy	1
CA501	620 191 6829	Connector 6P Assy	1
CA503	620 191 6935	Connector 3P Assy	1
CA802	620 191 6966	Connector 12P Assy	1
CA952	620 191 6911	Connector 10P Assy	1
CA954	620 191 6928	Connector 6P Assy	1
RA651	620 191 0292	Resistor 13X100K	1
RA652	620 191 0292	Resistor 13X100K	1
RA653	620 004 5254	Resistor 100K-8 J	1
RA654	620 004 5254	Resistor 100K-8 J	1
RA655	620 004 5254	Resistor 100K-8 J	1
RA656	620 004 5254	Resistor 100K-8 J	1
RA657	620 004 5209	Resistor 4X10K J	1
S651	620 016 7819	Tact Switch 160G	1
or	620 195 9628	Switch,Tact	1
S652	620 016 7819	Tact Switch 160G	1
or	620 195 9628	Switch,Tact	1
S653	620 016 7819	Tact Switch 160G	1
or	620 195 9628	Switch,Tact	1
S654	620 016 7819	Tact Switch 160G	1
or	620 195 9628	Switch,Tact	1
S655	620 016 7819	Tact Switch 160G	1
or	620 195 9628	Switch,Tact	1
S656	620 016 7819	Tact Switch 160G	1
or	620 195 9628	Switch,Tact	1
S657	620 016 7819	Tact Switch 160G	1
or	620 195 9628	Switch,Tact	1
S658	620 016 7819	Tact Switch 160G	1
or	620 195 9628	Switch,Tact	1
S659	620 014 8337	Keyboard Switch	1
S801	620 016 7819	Tact Switch 160G	1
or	620 195 9628	Switch,Tact	1
S802	620 016 7819	Tact Switch 160G	1
or	620 195 9628	Switch,Tact	1
S803	620 016 7819	Tact Switch 160G	1
or	620 195 9628	Switch,Tact	1
S804	620 016 7819	Tact Switch 160G	1
or	620 195 9628	Switch,Tact	1
S805	620 016 7819	Tact Switch 160G	1
or	620 195 9628	Switch,Tact	1
S806	620 016 7819	Tact Switch 160G	1
or	620 195 9628	Switch,Tact	1
S807	620 016 7819	Tact Switch 160G	1
or	620 195 9628	Switch,Tact	1
S808	620 016 7819	Tact Switch 160G	1
or	620 195 9628	Switch,Tact	1
S809	620 016 7819	Tact Switch 160G	1
or	620 195 9628	Switch,Tact	1
S810	620 016 7819	Tact Switch 160G	1
or	620 195 9628	Switch,Tact	1
S811	620 016 7819	Tact Switch 160G	1
or	620 195 9628	Switch,Tact	1
S812	620 016 7819	Tact Switch 160G	1
or	620 195 9628	Switch,Tact	1
S813	620 016 7819	Tact Switch 160G	1
or	620 195 9628	Switch,Tact	1
S814	620 016 7819	Tact Switch 160G	1
or	620 195 9628	Switch,Tact	1
S815	620 016 7819	Tact Switch 160G	1
or	620 195 9628	Switch,Tact	1
S816	620 016 7819	Tact Switch 160G	1
or	620 195 9628	Switch,Tact	1
S817	620 016 7819	Tact Switch 160G	1
or	620 195 9628	Switch,Tact	1
S818	620 016 7819	Tact Switch 160G	1
or	620 195 9628	Switch,Tact	1
S819	620 016 7819	Tact Switch 160G	1
or	620 195 9628	Switch,Tact	1
S820	620 016 7819	Tact Switch 160G	1
or	620 195 9628	Switch,Tact	1
S821	620 016 7819	Tact Switch 160G	1
or	620 195 9628	Switch,Tact	1
S822	620 016 7819	Tact Switch 160G	1
or	620 195 9628	Switch,Tact	1
S823	620 016 7819	Tact Switch 160G	1
or	620 195 9628	Switch,Tact	1
S824	620 016 7819	Tact Switch 160G	1

P.C.BOARD PARTS LIST (Continued)

Ref. No.	Part No.	Description	Q'ty
or	620 195 9628	Switch,Tact	1
S825	620 016 7819	Tact Switch 160G	1
or	620 195 9628	Switch,Tact	1
S826	620 016 7819	Tact Switch 160G	1
or	620 195 9628	Switch,Tact	1
VR651	620 190 9654	Potentiometer 1KB	1
VR652	620 190 9654	Potentiometer 1KB	1
VR653	620 190 9661	VR 50KW	1
IC651	409 170 4205	IC LC6554H-3863	1
IC652	409 121 1505	IC L78LR05E-MA	1
IC653	409 118 0603	IC LC7566	1
IC654	409 118 0603	IC LC7566	1
IC655	409 143 7004	IC BA14741	1
IC656	409 143 7004	IC BA14741	1
IC657	409 143 7004	IC BA14741	1
IC658	409 143 7004	IC BA14741	1
Q651	405 018 2600	TR 2SC3400	1
Q652	405 018 2600	TR 2SC3400	1
Q653	405 018 2600	TR 2SC3400	1
Q654	405 018 2600	TR 2SC3400	1
Q655	405 018 2600	TR 2SC3400	1
Q656	405 018 2600	TR 2SC3400	1
Q657	405 024 9907	TR 2SD734-F	1
or	405 025 0200	TR 2SD734-G	1
Q658	405 024 9907	TR 2SD734-F	1
or	405 025 0200	TR 2SD734-G	1
Q659	405 024 9907	TR 2SD734-F	1
or	405 025 0200	TR 2SD734-G	1
Q660	405 024 9907	TR 2SD734-F	1
or	405 025 0200	TR 2SD734-G	1
Q661	405 019 2807	TR 2SC536-F-SPA-AC	1
or	405 019 3903	TR 2SC536-G-SPA-AC	1
Q662	405 019 2807	TR 2SC536-F-SPA-AC	1
or	405 019 3903	TR 2SC536-G-SPA-AC	1
Q663	405 019 2807	TR 2SC536-F-SPA-AC	1
or	405 019 3903	TR 2SC536-G-SPA-AC	1
Q664	405 019 2807	TR 2SC536-F-SPA-AC	1
or	405 019 3903	TR 2SC536-G-SPA-AC	1
Q667	405 004 4601	TR 2SA608-F-SPA-AC	1
Q667	405 004 5103	TR 2SA608-G-SPA-AC	1
Q668	405 018 2600	TR 2SC3400	1
Q669	405 018 2600	TR 2SC3400	1
Q670	405 019 2807	TR 2SC536-F-SPA-AC	1
or	405 019 3903	TR 2SC536-G-SPA-AC	1
	407 088 6601	SENSOR BX-1407	1
D651	407 008 0405	DIODE GMB01-BT	1
D652	407 008 0405	DIODE GMB01-BT	1
D653	407 008 0405	DIODE GMB01-BT	1
D654	407 008 0405	DIODE GMB01-BT	1
D655	407 008 0405	DIODE GMB01-BT	1
D656	407 008 0405	DIODE GMB01-BT	1
D657	407 008 0405	DIODE GMB01-BT	1
D658	407 008 0405	DIODE GMB01-BT	1
D659	407 008 7305	DIODE MA700A-TA	1
D660	407 008 7305	DIODE MA700A-TA	1
D661	407 008 7305	DIODE MA700A-TA	1
D662	407 008 7305	DIODE MA700A-TA	1
D663	407 008 7305	DIODE MA700A-TA	1
D664	407 008 7305	DIODE MA700A-TA	1
D665	407 008 7305	DIODE MA700A-TA	1
D666	407 008 7305	DIODE MA700A-TA	1
D667	407 008 7305	DIODE MA700A-TA	1
D668	407 008 7305	DIODE MA700A-TA	1
D669	407 008 7305	DIODE MA700A-TA	1
D670	407 008 7305	DIODE MA700A-TA	1
D671	407 008 7305	DIODE MA700A-TA	1
D672	407 008 7305	DIODE MA700A-TA	1
D673	407 008 7305	DIODE MA700A-TA	1
D674	407 008 7305	DIODE MA700A-TA	1
D675	407 112 7307	LED SLB-55DU3F	1
D676	407 112 7505	LED SLP-671B-01	1
D677	407 112 7505	LED SLP-671B-01	1
D678	407 112 7505	LED SLP-671B-01	1
D679	407 112 7505	LED SLP-671B-01	1
D680	407 005 3805	DIODE DS442-BT	1
D681	407 005 3805	DIODE DS442-BT	1
D682	407 050 7308	ZENER DIODE GZA8.2Y-BT	1
D683	407 050 7308	ZENER DIODE GZA8.2Y-BT	1
C651	403 001 2309	CERAMIC 0.01U N 16V	1

Ref. No.	Part No.	Description	Q'ty
C652	403 069 1504	CERAMIC 1000P K 50V	1
C653	403 051 2304	ELECT 4.7U M 50V	1
C654	403 067 5603	MT-COMPO 0.1U J 50V	1
C655	403 044 8504	ELECT 10U M 25V	1
C656	403 045 0606	ELECT 100U M 25V	1
C657	403 045 0606	ELECT 100U M 25V	1
C658	403 001 2309	CERAMIC 0.01U N 16V	1
C659	403 069 5205	CERAMIC 0.01U K 50V	1
C660	403 002 2902	CERAMIC 0.01U M 25V	1
C661	403 069 5205	CERAMIC 0.01U K 50V	1
C663	403 003 3601	CERAMIC 0.022U N 25V	1
C664	403 003 3601	CERAMIC 0.022U N 25V	1
C665	403 003 3601	CERAMIC 0.022U N 25V	1
C666	403 003 3601	CERAMIC 0.022U N 25V	1
C667	403 003 3601	CERAMIC 0.022U N 25V	1
C668	403 003 3601	CERAMIC 0.022U N 25V	1
C669	403 003 3601	CERAMIC 0.022U N 25V	1
C670	403 003 3601	CERAMIC 0.022U N 25V	1
C671	403 005 1605	CERAMIC 4700P M 50V	1
C672	403 005 1605	CERAMIC 4700P M 50V	1
C673	403 005 1605	CERAMIC 4700P M 50V	1
C674	403 005 1605	CERAMIC 4700P M 50V	1
C675	403 004 9602	CERAMIC 2200P M 50V	1
C676	403 004 9602	CERAMIC 2200P M 50V	1
C677	403 004 9602	CERAMIC 2200P M 50V	1
C678	403 004 9602	CERAMIC 2200P M 50V	1
C679	403 004 2207	CERAMIC 5600P M 25V	1
C680	403 004 2207	CERAMIC 5600P M 25V	1
C681	403 004 2207	CERAMIC 5600P M 25V	1
C682	403 004 2207	CERAMIC 5600P M 25V	1
C683	403 004 9602	CERAMIC 2200P M 50V	1
C684	403 004 9602	CERAMIC 2200P M 50V	1
C685	403 004 9602	CERAMIC 2200P M 50V	1
C686	403 004 9602	CERAMIC 2200P M 50V	1
C687	403 004 9602	CERAMIC 2200P M 50V	1
C688	403 004 9602	CERAMIC 2200P M 50V	1
C689	403 004 9602	CERAMIC 2200P M 50V	1
C690	403 004 9602	CERAMIC 2200P M 50V	1
C691	403 004 8803	CERAMIC 1500P N 50V	1
C692	403 004 8803	CERAMIC 1500P N 50V	1
C693	403 042 0708	ELECT 10U M 16V	1
C694	403 042 0708	ELECT 10U M 16V	1
C695	403 042 0708	ELECT 10U M 16V	1
C696	403 042 0708	ELECT 10U M 16V	1
C697	403 049 1906	ELECT 1U M 50V	1
C698	403 049 1906	ELECT 1U M 50V	1
C699	403 049 1906	ELECT 1U M 50V	1
C700	403 049 1906	ELECT 1U M 50V	1
C701	403 049 1906	ELECT 1U M 50V	1
C702	403 049 1906	ELECT 1U M 50V	1
C703	403 049 1906	ELECT 1U M 50V	1
C704	403 049 1906	ELECT 1U M 50V	1
C705	403 049 1906	ELECT 1U M 50V	1
C706	403 049 1906	ELECT 1U M 50V	1
C707	403 049 1906	ELECT 1U M 50V	1
C708	403 049 1906	ELECT 1U M 50V	1
C709	403 049 1906	ELECT 1U M 50V	1
C710	403 049 1906	ELECT 1U M 50V	1
C711	403 049 1906	ELECT 1U M 50V	1
C712	403 049 1906	ELECT 1U M 50V	1
C713	403 049 1906	ELECT 1U M 50V	1
C714	403 049 1906	ELECT 1U M 50V	1
C717	403 038 7209	ELECT 220U M 6.3V	1
C718	403 038 7209	ELECT 220U M 6.3V	1
C719	403 038 2709	ELECT 100U M 6.3V	1
C720	403 074 2701	CERAMIC 0.047U Z 50V	1
C721	403 074 2701	CERAMIC 0.047U Z 50V	1
C722	403 074 2701	CERAMIC 0.047U Z 50V	1
C723	403 074 2701	CERAMIC 0.047U Z 50V	1
C724	403 074 2701	CERAMIC 0.047U Z 50V	1
C725	403 049 2002	ELECT 1U M 50V	1
R651	401 026 3905	CARBON 330 JA 1/6W	1
R652	401 024 6700	CARBON 100 JA 1/6W	1
R653	401 024 6700	CARBON 100 JA 1/6W	1
R654	401 024 6700	CARBON 100 JA 1/6W	1
R655	401 024 6700	CARBON 100 JA 1/6W	1
R656	401 024 9305	CARBON 1.2K JA 1/6W	1
R657	402 015 6402	FUSIBLE RES 2.2 J- 1/4W	1
R658	402 015 6402	FUSIBLE RES 2.2 J- 1/4W	1

P.C.BOARD PARTS LIST (Continued)

Ref. No.	Part No.	Description	Q'ty
R659	402 015 6402	FUSIBLE RES 2.2 J- 1/4W	1
R660	402 015 6402	FUSIBLE RES 2.2 J- 1/4W	1
R661	401 026 9907	CARBON 4.7K JA 1/6W	1
R662	401 024 7400	CARBON 10K JA 1/6W	1
R663	401 026 9907	CARBON 4.7K JA 1/6W	1
R664	401 024 7400	CARBON 10K JA 1/6W	1
R665	401 026 9907	CARBON 4.7K JA 1/6W	1
R666	401 024 7400	CARBON 10K JA 1/6W	1
R667	401 026 9907	CARBON 4.7K JA 1/6W	1
R668	401 024 7400	CARBON 10K JA 1/6W	1
R669	401 026 9600	CARBON 470 JA 1/6W	1
R670	401 024 7707	CARBON 100K JA 1/6W	1
R671	401 027 9005	CARBON 82K JA 1/6W	1
R672	401 024 7400	CARBON 10K JA 1/6W	1
R673	401 024 7707	CARBON 100K JA 1/6W	1
R674	401 012 7009	CARBON 10K JA 1/4W	1
R675	401 024 7400	CARBON 10K JA 1/6W	1
R676	401 020 0801	CARBON 470 JA 1/4W	1
R677	401 020 0801	CARBON 470 JA 1/4W	1
R679	401 025 3302	CARBON 16K JA 1/6W	1
R680	401 025 3302	CARBON 16K JA 1/6W	1
R681	401 025 2305	CARBON 150K JA 1/6W	1
R682	401 025 2305	CARBON 150K JA 1/6W	1
R683	401 028 0526	CARBON 910K JA 1/6W	1
R684	401 028 0526	CARBON 910K JA 1/6W	1
R685	401 027 4307	CARBON 6.2K JA 1/6W	1
R686	401 027 4307	CARBON 6.2K JA 1/6W	1
R687	401 027 4604	CARBON 62K JA 1/6W	1
R688	401 027 4604	CARBON 62K JA 1/6W	1
R689	401 026 6302	CARBON 360K JA 1/6W	1
R690	401 026 6302	CARBON 360K JA 1/6W	1
R691	401 024 9701	CARBON 12K JA 1/6W	1
R692	401 024 9701	CARBON 12K JA 1/6W	1
R693	401 024 8704	CARBON 110K JA 1/6W	1
R694	401 024 8704	CARBON 110K JA 1/6W	1
R695	401 027 6103	CARBON 680K JA 1/6W	1
R696	401 027 6103	CARBON 680K JA 1/6W	1
R697	401 024 7400	CARBON 10K JA 1/6W	1
R698	401 024 7400	CARBON 10K JA 1/6W	1
R699	401 028 0308	CARBON 91K JA 1/6W	1
R700	401 028 0308	CARBON 91K JA 1/6W	1
R701	401 027 3201	CARBON 560K JA 1/6W	1
R702	401 027 3201	CARBON 560K JA 1/6W	1
R703	401 025 3005	CARBON 1.6K JA 1/6W	1
R704	401 025 3005	CARBON 1.6K JA 1/6W	1
R705	401 025 1902	CARBON 15K JA 1/6W	1
R706	401 025 1902	CARBON 15K JA 1/6W	1
R707	401 028 0308	CARBON 91K JA 1/6W	1
R708	401 028 0308	CARBON 91K JA 1/6W	1
R709	401 025 3005	CARBON 1.6K JA 1/6W	1
R710	401 025 3005	CARBON 1.6K JA 1/6W	1
R711	401 025 1902	CARBON 15K JA 1/6W	1
R712	401 025 1902	CARBON 15K JA 1/6W	1
R713	401 028 0308	CARBON 91K JA 1/6W	1
R714	401 028 0308	CARBON 91K JA 1/6W	1
R715	401 027 4000	CARBON 620 JA 1/6W	1
R716	401 027 4000	CARBON 620 JA 1/6W	1
R717	401 027 4307	CARBON 6.2K JA 1/6W	1
R718	401 027 4307	CARBON 6.2K JA 1/6W	1
R719	401 026 6104	CARBON 36K JA 1/6W	1
R720	401 026 6104	CARBON 36K JA 1/6W	1
R721	401 025 4606	CARBON 18K JA 1/6W	1
R722	401 025 4606	CARBON 18K JA 1/6W	1
R723	401 024 7707	CARBON 100K JA 1/6W	1
R724	401 024 7707	CARBON 100K JA 1/6W	1
R725	401 024 7707	CARBON 100K JA 1/6W	1
R726	401 024 7707	CARBON 100K JA 1/6W	1
R727	401 025 1902	CARBON 15K JA 1/6W	1
R728	401 025 1902	CARBON 15K JA 1/6W	1
R729	401 025 1902	CARBON 15K JA 1/6W	1
R730	401 025 1902	CARBON 15K JA 1/6W	1
R731	401 025 1902	CARBON 15K JA 1/6W	1
R732	401 025 1902	CARBON 15K JA 1/6W	1
R733	401 025 1902	CARBON 15K JA 1/6W	1
R734	401 025 1902	CARBON 15K JA 1/6W	1
R735	401 025 1902	CARBON 15K JA 1/6W	1
R736	401 025 1902	CARBON 15K JA 1/6W	1
R737	401 025 1902	CARBON 15K JA 1/6W	1
R738	401 025 1902	CARBON 15K JA 1/6W	1

Ref. No.	Part No.	Description	Q'ty
R739	401 025 1902	CARBON 15K JA 1/6W	1
R740	401 025 1902	CARBON 15K JA 1/6W	1
R741	401 025 1902	CARBON 15K JA 1/6W	1
R742	401 025 1902	CARBON 15K JA 1/6W	1
R743	401 024 7400	CARBON 10K JA 1/6W	1
R744	401 024 7400	CARBON 10K JA 1/6W	1
R745	401 024 7707	CARBON 100K JA 1/6W	1
R746	401 012 8105	CARBON 100K JA 1/4W	1
R747	401 024 7004	CARBON 1K JA 1/6W	1
R748	401 024 7004	CARBON 1K JA 1/6W	1
R749	401 024 7707	CARBON 100K JA 1/6W	1
R750	401 024 7707	CARBON 100K JA 1/6W	1
R751	401 024 7707	CARBON 100K JA 1/6W	1
R752	401 024 7707	CARBON 100K JA 1/6W	1
R753	401 026 4308	CARBON 3.3K JA 1/6W	1
R754	401 026 4308	CARBON 3.3K JA 1/6W	1
R755	401 024 7707	CARBON 100K JA 1/6W	1
R756	401 012 8105	CARBON 100K JA 1/4W	1
R757	401 024 7400	CARBON 10K JA 1/6W	1
R758	401 024 7400	CARBON 10K JA 1/6W	1
R759	401 024 7400	CARBON 10K JA 1/6W	1
R760	401 024 7400	CARBON 10K JA 1/6W	1
R761	401 012 7009	CARBON 10K JA 1/4W	1
ASSY,PCB,CD MAIN			
53	620 196 5483	Assy,PCB,CD Main	1
	620 017 2721	Fuse Clip	4
	411 020 7700	SCR S-TPG BRZ 3X6	3
	620 031 4763	Wire Wrap Terminal	21
	620 053 9258	Plate Heat Sink	3
CA100	620 191 7086	Connector 1P Assy	1
CA310	620 191 6812	Connector 3P Assy	1
CA319	620 191 6904	Connector 2P Assy	1
CA621	620 191 7024	Connector 5P Assy	1
CN2	620 021 7811	Plug 3P	1
CN5	620 021 4346	Plug 4P	1
CN6	620 021 8313	Plug 3P	1
CN7	620 021 4025	Plug 3P	1
CN8	620 021 1970	Plug 2P	1
CN9	620 021 8306	Plug 2P	1
CN10	620 021 7620	Plug 2P	1
CN11	620 021 4025	Plug 3P	1
CN12	620 021 8610	Plug 6P	1
CN13	620 021 4346	Plug 4P	1
CN14	620 021 8337	Plug 6P	1
CN15	620 021 5589	Plug 5P	1
CN17	620 018 1860	Socket 8P	1
CN18	620 018 1877	Socket 9P	1
CN19	620 018 1877	Socket 9P	1
CN20	620 018 1860	Socket 8P	1
F101 ⚠	423 004 3301	FUSE 250V T 0.8A	1
F102 ⚠	423 004 3301	FUSE 250V T 0.8A	1
P101	620 006 1957	Potentiometer 20KB	1
P102	620 006 2343	Potentiometer 100KB	1
P103	620 006 1957	Potentiometer 20KB	1
P104	620 006 1933	Potentiometer 100KB	1
P105	620 006 1933	Potentiometer 100KB	1
P106	620 006 1957	Potentiometer 20KB	1
P301	620 006 1940	Potentiometer 10KB	1
T101	620 026 8745	RF Filter	1
T102	620 028 8699	OSC Coil	1
or	620 028 8774	OSC Coil	1
WW1	620 021 6821	Pin 1P	1
X101	620 182 6999	Crystal 8.6436MHz	1
or	620 007 3172	Crystal	1
X102	620 196 8866	Resonator,Ceramic,4.32MHz	1
or	620 007 3400	Ceramic OSC 4.32MHz	1
IC101	409 124 6507	IC LA9200NM	1
IC102	409 168 1308	IC LC7860J	1
IC103	409 123 7109	IC LC3517BS-15	1
IC104	409 067 0709	IC LC7880	1
IC105	409 018 5203	IC LA6462D	1
IC107	409 018 5500	IC LA6510	1
IC108	409 018 5500	IC LA6510	1
IC109	409 077 7606	IC LA6500	1
IC110	409 057 4601	IC UPC4570HA	1
IC111	409 057 4601	IC UPC4570HA	1
IC113	409 031 5600	IC MC74HCU04N	1
or	409 110 4807	IC NJU74HCU04D	1

P.C.BOARD PARTS LIST (Continued)

Ref. No.	Part No.	Description	Q'ty
IC114	409 164 3801	IC LC6538D-3843	1
IC115	409 031 8106	OK MC7805CT	1
or	409 040 0603	IC NJM7805A	1
IC116	409 031 8205	IC MC79L05ACP	1
or	409 050 1706	IC TA79L005P	1
IC117	409 183 7705	IC NJM79L07A	1
or	409 073 1301	IC AN79L07	1
IC118	409 183 7606	IC NJM78L07A	1
or	409 142 3106	IC TA78L007P	1
Q101	405 036 7403	TR 2SC2999-F-SPA	1
or	405 016 5900	TR 2SC2999-E-SPA	1
Q102	405 019 2708	TR 2SC536-F-NP-AA	1
or	405 019 3804	TR 2SC536-G-NP-AA	1
Q103	405 019 2708	TR 2SC536-F-NP-AA	1
or	405 019 3804	TR 2SC536-G-NP-AA	1
Q104	405 021 0600	TR 2SD1012-G-SPA-AC	1
or	405 021 0204	TR 2SD1012-F-SPA-AC	1
Q105	405 021 0600	TR 2SD1012-G-SPA-AC	1
or	405 021 0204	TR 2SD1012-F-SPA-AC	1
Q106	405 021 0600	TR 2SD1012-G-SPA-AC	1
or	405 021 0204	TR 2SD1012-F-SPA-AC	1
Q107	405 021 0600	TR 2SD1012-G-SPA-AC	1
or	405 021 0204	TR 2SD1012-F-SPA-AC	1
Q108	405 018 2600	TR 2SC3400	1
Q109	405 004 4502	TR 2SA608-F-NP-AA	1
Q110	405 007 6701	TR 2SB598-F-NP	1
or	405 007 6909	TR 2SB598-G-NP	1
Q111	405 021 0600	TR 2SD1012-G-SPA-AC	1
or	405 021 0204	TR 2SD1012-F-SPA-AC	1
Q112	405 027 0505	TR 2SK246-GR	1
or	405 034 5104	TR 2SK246-BL	1
Q113	405 035 8104	TR UN421-D	1
Q114	405 035 8005	TR UN411-D	1
Q115	405 004 4502	TR 2SA608-F-NP-AA	1
Q117	405 019 2708	TR 2SC536-F-NP	1
or	405 019 3804	TR 2SC536-G-NP	1
Q118	405 019 2708	TR 2SC536-F-NP	1
or	405 019 3804	TR 2SC536-G-NP	1
Q301	405 019 2708	TR 2SC536-F-NP-AA	1
or	405 019 3804	TR 2SC536-G-NP-AA	1
Q302	405 018 2600	TR 2SC3400	1
D101	407 000 3503	VARACTOR DI SVC211SP	1
D102	407 007 9904	DIODE GMA01-BT	1
D103	407 007 9904	DIODE GMA01-BT	1
D104	407 005 3805	DIODE DS442-BT	1
D105	407 007 9904	DIODE GMA01-BT	1
D106	407 007 9904	DIODE GMA01-BT	1
D107	407 007 9904	DIODE GMA01-BT	1
D108	407 007 9904	DIODE GMA01-BT	1
D109	407 005 3805	DIODE DS442-BT	1
D110	407 007 9904	DIODE GMA01-BT	1
D111	407 005 3805	DIODE DS442-BT	1
D112	407 007 9904	DIODE GMA01-BT	1
D113	407 007 9904	DIODE GMA01-BT	1
D114	407 007 9904	DIODE GMA01-BT	1
D115	407 007 9904	DIODE GMA01-BT	1
D116	407 007 9904	DIODE GMA01-BT	1
D117	407 007 9904	DIODE GMA01-BT	1
D118	407 007 9904	DIODE GMA01-BT	1
D123	407 005 8602	DIODE ERA15-02	1
D124	407 005 8602	DIODE ERA15-02	1
D125	407 005 8602	DIODE ERA15-02	1
D126	407 005 8602	DIODE ERA15-02	1
D127	407 005 3805	DIODE DS442	1
D301	407 007 9904	DIODE GMA01-BT	1
D302	407 005 3805	DIODE DS442-BT	1
D303	407 007 9904	DIODE GMA01-BT	1
D304	407 007 9904	DIODE GMA01-BT	1
D305	407 007 9904	DIODE GMA01-BT	1
D307	407 007 9904	DIODE GMA01-BT	1
D308	407 007 9904	DIODE GMA01-BT	1
D309	407 050 6806	ZENER DIODE GZA7.5X	1
D310	407 007 9904	DIODE GMA01-BT	1
D311	407 005 3805	DIODE DS442-BT	1
C101	403 069 8404	CERAMIC 0.01U Z 50V	1
C102	403 038 2303	ELECT 100U M 6.3V	1
C103	403 038 2303	ELECT 100U M 6.3V	1
C104	403 038 2303	ELECT 100U M 6.3V	1
C105	403 014 6202	CERAMIC 18P K 50V	1

Ref. No.	Part No.	Description	Q'ty
C106	403 014 6202	CERAMIC 18P K 50V	1
C107	403 031 0306	CERAMIC 68P K 50V	1
C108	403 015 0407	CERAMIC 180P K 50V	1
C109	403 048 7602	ELECT 0.47U M 50V	1
C110	403 031 0306	CERAMIC 68P K 50V	1
C111	403 057 0908	POLYESTER 0.01U K 50V	1
C112	403 018 8509	CERAMIC 220P K 50V	1
C113	403 061 4404	POLYESTER 0.039U K 50V	1
C114	403 087 2507	STYRENE 1000P J 50V	1
C115	403 057 0908	POLYESTER 0.01U K 50V	1
C116	403 067 7706	MT-COMPO 0.047U J 50V	1
C117	403 057 0908	POLYESTER 0.01U K 50V	1
C118	403 060 6607	POLYESTER 3300P K 50V	1
C119	403 067 6204	MT-COMPO 0.15U J 50V	1
C120	403 067 6709	MT-COMPO 0.22U J 50V	1
C121	403 067 7300	MT-COMPO 0.33U J 50V	1
C122	403 149 7105	POLYPRO 680P J 100V	1
C123	403 060 8700	POLYESTER 0.033U K 50V	1
C124	403 067 5603	MT-COMPO 0.1U J 50V	1
C125	403 042 0302	ELECT 10U M 16V	1
C126	403 074 2701	CERAMIC 0.047U Z 50V	1
C127	403 022 7703	CERAMIC 33P J 50V	1
C128	403 022 7703	CERAMIC 33P J 50V	1
C129	403 074 2701	CERAMIC 0.047U Z 50V	1
C130	403 074 2701	CERAMIC 0.047U Z 50V	1
C131	403 038 7209	ELECT 220U M 6.3V	1
C132	403 040 4807	ELECT 220U M 10V	1
C133	403 040 4807	ELECT 220U M 10V	1
C134	403 020 8108	CERAMIC 3P C 50V	1
C135	403 020 8108	CERAMIC 3P C 50V	1
C136	403 038 2303	ELECT 100U M 6.3V	1
C137	403 067 7409	MT-COMPO 0.039U J 50V	1
C138	403 067 7409	MT-COMPO 0.039U J 50V	1
C139	403 049 1708	ELECT 1U M 50V	1
C140	403 049 1708	ELECT 1U M 50V	1
C145	403 031 0306	CERAMIC 68P K 50V	1
C146	403 031 0306	CERAMIC 68P K 50V	1
C147	403 039 2906	ELECT 47U M 6.3V	1
C148	403 038 7209	ELECT 220U M 6.3V	1
C149	403 067 6709	MT-COMPO 0.22U J 50V	1
C150	403 026 9406	CERAMIC 5P C 50V	1
C151	403 018 8509	CERAMIC 220P K 50V	1
C152	403 050 1209	ELECT 2.2U M 50V	1
C153	403 050 1209	ELECT 2.2U M 50V	1
C154	403 085 0802	NP-ELECT 47U M 6.3V	1
C155	403 067 6709	MT-COMPO 0.22U J 50V	1
C156	403 086 1907	NP-ELECT 0.47U M 50V	1
C157	403 073 7004	CERAMIC 470P K 50V	1
C158	403 067 8406	MT-COMPO 0.082U J 50V	1
C159	403 073 7004	CERAMIC 470P K 50V	1
C160	403 067 5603	MT-COMPO 0.1U J 50V	1
C161	403 074 2701	CERAMIC 0.047U Z 50V	1
C162	403 057 0908	POLYESTER 0.01U K 50V	1
C163	403 067 7805	MT-COMPO 0.47U J 50V	1
C164	403 050 1209	ELECT 2.2U M 50V	1
C165	403 038 2402	ELECT 100U M 6.3V	1
C166	403 074 2701	CERAMIC 0.047U Z 50V	1
C168	403 074 2701	CERAMIC 0.047U Z 50V	1
C169	403 069 8404	CERAMIC 0.01U Z 50V	1
C171	403 067 6204	MT-COMPO 0.15U J 50V	1
C172	403 059 4102	POLYESTER 2200P K 50V	1
C173	403 057 8003	POLYESTER 0.012U K 50V	1
C174	403 057 8003	POLYESTER 0.012U K 50V	1
C175	403 002 3602	CERAMIC 0.1U K 25V	1
C176	403 002 3602	CERAMIC 0.1U K 25V	1
C177	403 067 7805	MT-COMPO 0.47U J 50V	1
C178	403 057 0908	POLYESTER 0.01U K 50V	1
C179	403 067 5603	MT-COMPO 0.1U J 50V	1
C182	403 039 2906	ELECT 47U M 6.3V	1
C183	403 002 3602	CERAMIC 0.1U K 25V	1
C184	403 043 1100	ELECT 220U M 16V	1
C185	403 050 1209	ELECT 2.2U M 50V	1
C186	403 050 9007	ELECT 33U M 50V	1
C187	403 040 4807	ELECT 220U M 10V	1
C189	403 040 4807	ELECT 220U M 10V	1
C193	403 104 9205	ELECT 220U M 10V	1
C194	403 040 4807	ELECT 220U M 10V	1
C195	403 039 2906	ELECT 47U M 6.3V	1
C196	403 074 2701	CERAMIC 0.047U Z 50V	1

P.C.BOARD PARTS LIST (Continued)

Ref. No.	Part No.	Description	Q'ty
C197	403 074 2701	CERAMIC 0.047U Z 50V	1
C198	403 074 2701	CERAMIC 0.047U Z 50V	1
C200	403 074 2701	CERAMIC 0.047U Z 50V	1
C201	404 012 4900	ELECT 3300U M 25V	1
C202	404 012 4900	ELECT 3300U M 25V	1
C203	403 072 2703	CERAMIC 0.022U Z 50V	1
C204	403 072 2703	CERAMIC 0.022U Z 50V	1
C207	403 052 8008	ELECT 100U M 35V	1
C208	403 074 2701	CERAMIC 0.047U Z 50V	1
C209	403 069 1207	CERAMIC 1000P K 50V	1
C210	403 050 7706	ELECT 3.3U M 50V	1
C211	403 074 2701	CERAMIC 0.047U Z 50V	1
C212	403 074 2701	CERAMIC 0.047U Z 50V	1
C301	403 051 2007	ELECT 4.7U M 50V	1
C302	403 045 0507	ELECT 100U M 25V	1
C303	403 045 0507	ELECT 100U M 25V	1
C304	403 049 1708	ELECT 1U M 50V	1
C305	403 072 5407	CERAMIC 2700P K 50V	1
C306	403 038 2303	ELECT 100U M 6.3V	1
C307	403 073 7004	CERAMIC 470P K 50V	1
C312	403 072 2703	CERAMIC 0.022U Z 50V	1
C313	403 040 4807	ELECT 220U M 10V	1
C314	403 074 2701	CERAMIC 0.047U Z 50V	1
C315	403 033 7303	CERAMIC 82P K 50V	1
C316	403 041 3304	ELECT 47U M 10V	1
R101	401 024 7004	CARBON 1K JA 1/6W	1
R102	401 025 2305	CARBON 150K JA 1/6W	1
R103	401 024 7707	CARBON 100K JA 1/6W	1
R104	401 027 2600	CARBON 5.6K JA 1/6W	1
R105	401 026 4605	CARBON 33K JA 1/6W	1
R106	401 027 0507	CARBON 470K JA 1/6W	1
R107	401 024 7707	CARBON 100K JA 1/6W	1
R108	401 025 1902	CARBON 15K JA 1/6W	1
R109	401 027 2303	CARBON 560 JA 1/6W	1
R110	401 025 7805	CARBON 2.2K JA 1/6W	1
R111	401 026 9600	CARBON 470 JA 1/6W	1
R112	401 026 9907	CARBON 4.7K JA 1/6W	1
R113	401 024 7707	CARBON 100K JA 1/6W	1
R114	401 025 7805	CARBON 2.2K JA 1/6W	1
R115	401 025 8703	CARBON 220K JA 1/6W	1
R116	401 026 0607	CARBON 270 JA 1/6W	1
R117	401 026 7408	CARBON 39K JA 1/6W	1
R118	401 024 9701	CARBON 12K JA 1/6W	1
R119	401 026 7408	CARBON 39K JA 1/6W	1
R120	401 024 9701	CARBON 12K JA 1/6W	1
R121	401 026 1307	CARBON 27K JA 1/6W	1
R122	401 024 7707	CARBON 100K JA 1/6W	1
R123	401 026 4308	CARBON 3.3K JA 1/6W	1
R124	401 026 9907	CARBON 4.7K JA 1/6W	1
R125	401 025 7409	CARBON 220 JA 1/6W	1
R126	401 025 8208	CARBON 22K JA 1/6W	1
R127	401 025 1902	CARBON 15K JA 1/6W	1
R128	401 012 5708	CARBON 1K JA 1/4W	1
R129	401 025 7805	CARBON 2.2K JA 1/6W	1
R130	401 025 8208	CARBON 22K JA 1/6W	1
R131	401 025 8208	CARBON 22K JA 1/6W	1
R132	401 012 8105	CARBON 100K JA 1/4W	1
R133	401 012 8105	CARBON 100K JA 1/4W	1
R134	401 012 7009	CARBON 10K JA 1/4W	1
R135	401 016 3809	CARBON 2.2K JA 1/4W	1
R136	401 012 7009	CARBON 10K JA 1/4W	1
R137	401 027 0309	CARBON 47K JA 1/6W	1
R138	401 012 4503	CARBON 100 JA 1/4W	1
R139	401 026 3707	CARBON 33 JA 1/6W	1
R140	401 024 7400	CARBON 10K JA 1/6W	1
R141	401 024 7707	CARBON 100K JA 1/6W	1
R142	401 024 7400	CARBON 10K JA 1/6W	1
R143	401 025 8208	CARBON 22K JA 1/6W	1
R144	401 024 7400	CARBON 10K JA 1/6W	1
R145	401 027 5205	CARBON 680 JA 1/6W	1
R146	401 024 7400	CARBON 10K JA 1/6W	1
R147	401 024 7400	CARBON 10K JA 1/6W	1
R148	401 025 1902	CARBON 15K JA 1/6W	1
R149	401 024 9305	CARBON 1.2K JA 1/6W	1
R150	401 024 9305	CARBON 1.2K JA 1/6W	1
R151	401 025 8703	CARBON 220K JA 1/6W	1
R152	401 025 8703	CARBON 220K JA 1/6W	1
R153	401 026 6609	CARBON 390 JA 1/6W	1
R154	401 026 6609	CARBON 390 JA 1/6W	1

Ref. No.	Part No.	Description	Q'ty
R155	401 024 7400	CARBON 10K JA 1/6W	1
R156	401 024 7400	CARBON 10K JA 1/6W	1
R157	401 027 5502	CARBON 6.8K JA 1/6W	1
R158	401 027 5502	CARBON 6.8K JA 1/6W	1
R167	401 027 3003	CARBON 56K JA 1/6W	1
R168	401 027 3003	CARBON 56K JA 1/6W	1
R169	401 024 7004	CARBON 1K JA 1/6W	1
R170	401 024 7004	CARBON 1K JA 1/6W	1
R173	401 027 5502	CARBON 6.8K JA 1/6W	1
R174	401 027 5502	CARBON 6.8K JA 1/6W	1
R175	401 025 5405	CARBON 2.2 JA 1/6W	1
R176	401 025 5405	CARBON 2.2 JA 1/6W	1
R177	401 026 4902	CARBON 330K JA 1/6W	1
R178	401 026 1307	CARBON 27K JA 1/6W	1
R179	401 025 5405	CARBON 2.2 JA 1/6W	1
R180	401 025 5405	CARBON 2.2 JA 1/6W	1
R181	401 026 1604	CARBON 270K JA 1/6W	1
R182	401 027 0309	CARBON 47K JA 1/6W	1
R183	401 025 8208	CARBON 22K JA 1/6W	1
R184	401 024 9305	CARBON 1.2K JA 1/6W	1
R185	401 024 7707	CARBON 100K JA 1/6W	1
R186	401 025 8208	CARBON 22K JA 1/6W	1
R187	401 027 2600	CARBON 5.6K JA 1/6W	1
R188	401 026 1604	CARBON 270K JA 1/6W	1
R189	401 024 7707	CARBON 100K JA 1/6W	1
R190	401 016 4806	CARBON 22K JA 1/4W	1
R191	401 013 7305	CARBON 120K JA 1/4W	1
R192	401 026 4605	CARBON 33K JA 1/6W	1
R193	401 024 6700	CARBON 100 JA 1/6W	1
R194	401 025 4606	CARBON 18K JA 1/6W	1
R195	401 025 8208	CARBON 22K JA 1/6W	1
R197	401 025 7805	CARBON 2.2K JA 1/6W	1
R198	401 025 7805	CARBON 2.2K JA 1/6W	1
R199	401 024 7400	CARBON 10K JA 1/6W	1
R200	401 024 7400	CARBON 10K JA 1/6W	1
R201	401 027 5502	CARBON 6.8K JA 1/6W	1
R202	401 026 8108	CARBON 4.7 JA 1/6W	1
R203	401 025 5405	CARBON 2.2 JA 1/6W	1
R204	401 026 4902	CARBON 330K JA 1/6W	1
R205	401 027 9005	CARBON 82K JA 1/6W	1
R206	401 026 8108	CARBON 4.7 JA 1/6W	1
R209	401 026 7606	CARBON 390K JA 1/6W	1
R210	401 025 2305	CARBON 150K JA 1/6W	1
R211	401 026 9907	CARBON 4.7K JA 1/6W	1
R212	401 024 7400	CARBON 10K JA 1/6W	1
R213	401 027 5908	CARBON 68K JA 1/6W	1
R214	401 026 9907	CARBON 4.7K JA 1/6W	1
R215	401 026 4902	CARBON 330K JA 1/6W	1
R216	401 026 7606	CARBON 390K JA 1/6W	1
R217	401 027 3201	CARBON 560K JA 1/6W	1
R218	401 027 3201	CARBON 560K JA 1/6W	1
R219	401 024 7707	CARBON 100K JA 1/6W	1
R220	401 024 7707	CARBON 100K JA 1/6W	1
R221	401 012 8105	CARBON 100K JA 1/4W	1
R222	401 026 8108	CARBON 4.7 JA 1/6W	1
R223	401 025 5405	CARBON 2.2 JA 1/6W	1
R224	401 024 7707	CARBON 100K JA 1/6W	1
R225	401 024 7707	CARBON 100K JA 1/6W	1
R226	401 024 7707	CARBON 100K JA 1/6W	1
R227	401 028 0308	CARBON 91K JA 1/6W	1
R228	401 027 3201	CARBON 560K JA 1/6W	1
R229	401 027 5502	CARBON 6.8K JA 1/6W	1
R230	401 027 8602	CARBON 8.2K JA 1/6W	1
R231	401 025 8703	CARBON 220K JA 1/6W	1
R232	401 027 0309	CARBON 47K JA 1/6W	1
R233	401 025 8208	CARBON 22K JA 1/6W	1
R234	401 025 8208	CARBON 22K JA 1/6W	1
R235	401 026 6104	CARBON 36K JA 1/6W	1
R236	401 026 9600	CARBON 470 JA 1/6W	1
R237	401 025 0004	CARBON 120K JA 1/6W	1
R238	401 024 7707	CARBON 100K JA 1/6W	1
R244	401 024 7400	CARBON 10K JA 1/6W	1
R245	401 027 2303	CARBON 560 JA 1/6W	1
R246	401 024 7400	CARBON 10K JA 1/6W	1
R247	401 024 7400	CARBON 10K JA 1/6W	1
R248	401 012 7009	CARBON 10K JA 1/4W	1
R249	401 025 7805	CARBON 2.2K JA 1/6W	1
R250	401 024 7400	CARBON 10K JA 1/6W	1
R251	401 024 7400	CARBON 10K JA 1/6W	1

P.C.BOARD PARTS LIST (Continued)

Ref. No.	Part No.	Description	Q'ty
R252	401 024 7400	CARBON 10K JA 1/6W	1
R253	401 025 7805	CARBON 2.2K JA 1/6W	1
R254	401 012 4909	CARBON 100 JA 1/4W	1
R255	401 025 8208	CARBON 22K JA 1/6W	1
R256	401 024 7004	CARBON 1K JA 1/6W	1
R257	401 026 4902	CARBON 330K JA 1/6W	1
R258	401 027 0309	CARBON 47K JA 1/6W	1
R259	401 024 7004	CARBON 1K JA 1/6W	1
R260	402 015 9205	FUSIBLE RES 47 J- 1/4W	1
R261	401 024 7707	CARBON 100K JA 1/6W	1
R262	401 016 1102	CARBON 22 JA 1/4W	1
R264	402 016 4506	FUSIBLE RES 10 J- 1/2W	1
R265	402 016 4506	FUSIBLE RES 10 J- 1/2W	1
R266	402 016 4506	FUSIBLE RES 10 J- 1/2W	1
R267	402 016 4506	FUSIBLE RES 10 J- 1/2W	1
R269	401 025 7805	CARBON 2.2K JA 1/6W	1
R270	401 016 3809	CARBON 2.2K JA 1/4W	1
R271	401 025 7409	CARBON 220 JA 1/6W	1
R272	401 025 8208	CARBON 22K JA 1/6W	1
R273	401 026 9600	CARBON 470 JA 1/6W	1
R274	401 024 7707	CARBON 100K JA 1/6W	1
R275	401 027 9005	CARBON 82K JA 1/6W	1
R283	401 016 5803	CARBON 220K JA 1/4W	1
R301	401 012 2905	CARBON 10 JA 1/4W	1
R302	401 016 1102	CARBON 22 JA 1/4W	1
R303	401 012 2905	CARBON 10 JA 1/4W	1
R304	401 024 7400	CARBON 10K JA 1/6W	1
R305	401 024 7707	CARBON 100K JA 1/6W	1
R306	401 024 7004	CARBON 1K JA 1/6W	1
R307	401 024 7004	CARBON 1K JA 1/6W	1
R308	401 020 2904	CARBON 47K JA 1/4W	1
R309	401 020 2003	CARBON 4.7K JA 1/4W	1
R310	401 024 7004	CARBON 1K JA 1/6W	1
ASSY,PCB,DECK FUNCTION			
54	620 196 3212	Assy,PCB,Deck Function	1
	620 017 1977	Pin Jack 4P	2
	620 192 4732	Plate Shield	1
CA803	620 191 6973	Connector 3P Assy	1
CA804	620 191 6959	Connector 2P Assy	1
CA953	620 191 6942	Connector 5P Assy	1
CN301	620 021 5923	Plug 3P	1
CN302	620 021 3950	Plug 6P	1
CN303	620 021 1970	Plug 2P	1
CN304	620 021 5596	Plug 8P	1
CN305	620 021 6555	Plug 4P	1
CN306	620 021 5596	Plug 8P	1
CN307	620 021 6586	Plug 7P	1
CN308	620 021 2106	Plug 8P	1
CN309	620 021 7163	Plug 3P	1
CN310	620 021 9198	Plug 3P	1
CN311	620 021 6234	Plug 7P	1
CN312	620 022 0835	Plug 6P	1
CN313	620 021 5923	Plug 3P	1
CN314	620 021 8399	Plug 7P	1
CN315	620 021 9976	Plug 9P	1
CN316	620 021 8344	Plug 10P	1
CN317	620 021 8313	Plug 3P	1
CN318	620 021 8597	Plug 4P	1
CN319	620 021 7613	Plug 2P	1
CN320	620 021 7613	Plug 2P	1
RA500	620 004 5438	Resistor 8X10K J	1
T301	620 026 4631	Bias Trap 105 Shield	1
T302	620 026 4631	Bias Trap 105 Shield	1
T303	620 026 4440	Bias Trap	1
T304	620 026 4440	Bias Trap	1
T305	620 191 6638	Filter Dolby	1
or	620 029 5864	Filter Dolby	1
T306	620 191 6638	Filter Dolby	1
or	620 029 5864	Filter Dolby	1
T307	620 027 1899	Coil,6.8MHz/2.2MHz.	1
T308	620 027 1899	Coil,6.8MHz/2.2MHz.	1
T309	620 028 8668	Coil OSC	1
VR301	620 190 9630	Potentiometer 200B	1
or	620 006 1988	Potentiometer 200B	1
VR302	620 190 9630	Potentiometer 200B	1
or	620 006 1988	Potentiometer 200B	1
VR303	620 190 9630	Potentiometer 200B	1
or	620 006 1988	Potentiometer 200B	1

Ref. No.	Part No.	Description	Q'ty
VR304	620 190 9630	Potentiometer 200B	1
or	620 006 1988	Potentiometer 200B	1
VR305	620 190 9630	Potentiometer 200B	1
or	620 006 1988	Potentiometer 200B	1
VR306	620 190 9630	Potentiometer 200B	1
or	620 006 1988	Potentiometer 200B	1
VR307	620 190 9609	Potentiometer 100KB	1
or	620 006 1933	Potentiometer 100KB	1
VR308	620 190 9609	Potentiometer 100KB	1
or	620 006 1933	Potentiometer 100KB	1
X301	620 007 3424	FARC4LA-08000	1
or	620 195 9857	Resonator,Ceramic	1
IC301	409 016 7704	IC LA3160	1
IC302	409 016 7704	IC LA3160	1
IC303	409 020 8704	IC LC4066B	1
IC304	409 016 5502	IC LA2000	1
IC305	409 173 9504	IC HA12136	1
IC306	409 115 8800	IC TA8121AN	1
IC307	409 115 8800	IC TA8121AN	1
IC308	409 178 7000	IC M50747-795SP	1
IC309	409 020 6601	IC LC4001B	1
IC310	409 020 9800	IC LC4081B	1
IC311	409 145 8405	IC UPC1330HA	1
IC312	409 018 4909	IC LA6458S	1
IC313	409 018 4909	IC LA6458S	1
IC314	409 018 4909	IC LA6458S	1
IC315	409 018 4909	IC LA6458S	1
IC316	409 109 5303	IC LC7823	1
IC317	409 109 5303	IC LC7823	1
Q301	405 019 2807	TR 2SC536-F-SPA-AC	1
or	405 019 3903	TR 2SC536-G-SPA-AC	1
Q302	405 019 2807	TR 2SC536-F-SPA-AC	1
or	405 019 3903	TR 2SC536-G-SPA-AC	1
Q303	405 021 0204	TR 2SD1012-F-SPA-AC	1
or	405 021 0600	TR 2SD1012-G-SPA-AC	1
Q304	405 021 0204	TR 2SD1012-F-SPA-AC	1
or	405 021 0600	TR 2SD1012-G-SPA-AC	1
Q305	405 021 0204	TR 2SD1012-F-SPA-AC	1
or	405 021 0600	TR 2SD1012-G-SPA-AC	1
Q306	405 021 0204	TR 2SD1012-F-SPA-AC	1
or	405 021 0600	TR 2SD1012-G-SPA-AC	1
Q307	405 019 2807	TR 2SC536-F-SPA-AC	1
or	405 019 3903	TR 2SC536-G-SPA-AC	1
Q308	405 003 7702	TR 2SA1346	1
Q309	405 018 2600	TR 2SC3400	1
Q310	405 019 2807	TR 2SC536-F-SPA-AC	1
or	405 019 3903	TR 2SC536-G-SPA-AC	1
Q311	405 018 2600	TR 2SC3400	1
Q314	405 018 2600	TR 2SC3400	1
Q315	405 018 2600	TR 2SC3400	1
Q317	405 018 2600	TR 2SC3400	1
Q318	405 018 2600	TR 2SC3400	1
Q319	405 018 2600	TR 2SC3400	1
Q320	405 018 2600	TR 2SC3400	1
Q321	405 018 2600	TR 2SC3400	1
Q322	405 018 2600	TR 2SC3400	1
Q323	405 019 2807	TR 2SC536-F-SPA-AC	1
or	405 019 3903	TR 2SC536-G-SPA-AC	1
Q324	405 019 2807	TR 2SC536-F-SPA-AC	1
or	405 019 3903	TR 2SC536-G-SPA-AC	1
Q327	405 019 2807	TR 2SC536-F-SPA-AC	1
or	405 019 3903	TR 2SC536-G-SPA-AC	1
Q328	405 019 2807	TR 2SC536-F-SPA-AC	1
or	405 019 3903	TR 2SC536-G-SPA-AC	1
Q329	405 019 2807	TR 2SC536-F-SPA-AC	1
or	405 019 3903	TR 2SC536-G-SPA-AC	1
Q330	405 019 2807	TR 2SC536-F-SPA-AC	1
or	405 019 3903	TR 2SC536-G-SPA-AC	1
Q333	405 021 0204	TR 2SD1012-F-SPA-AC	1
or	405 021 0600	TR 2SD1012-G-SPA-AC	1
Q334	405 021 0204	TR 2SD1012-F-SPA-AC	1
or	405 021 0600	TR 2SD1012-G-SPA-AC	1
Q335	405 021 0204	TR 2SD1012-F-SPA-AC	1
or	405 021 0600	TR 2SD1012-G-SPA-AC	1
Q336	405 021 0204	TR 2SD1012-F-SPA-AC	1
or	405 021 0600	TR 2SD1012-G-SPA-AC	1
Q337	405 019 2807	TR 2SC536-F-SPA-AC	1
or	405 019 3903	TR 2SC536-G-SPA-AC	1
Q338	405 019 2807	TR 2SC536-F-SPA-AC	1

P.C.BOARD PARTS LIST (Continued)

Ref. No.	Part No.	Description	Q'ty
or	405 019 3903	TR 2SC536-G-SPA-AC	1
Q339	405 018 2600	TR 2SC3400	1
Q340	405 018 2600	TR 2SC3400	1
Q341	405 018 2600	TR 2SC3400	1
Q342	405 018 2600	TR 2SC3400	1
Q343	405 018 2600	TR 2SC3400	1
Q344	405 018 2600	TR 2SC3400	1
Q345	405 018 2600	TR 2SC3400	1
Q346	405 018 2600	TR 2SC3400	1
Q347	405 003 7702	TR 2SA1346	1
Q348	405 018 2600	TR 2SC3400	1
Q349	405 003 7702	TR 2SA1346	1
Q350	405 018 2600	TR 2SC3400	1
Q351	405 003 7702	TR 2SA1346	1
Q352	405 018 2600	TR 2SC3400	1
Q353	405 003 7702	TR 2SA1346	1
Q354	405 018 2600	TR 2SC3400	1
Q355	405 003 7702	TR 2SA1346	1
Q356	405 018 2600	TR 2SC3400	1
Q357	405 019 2807	TR 2SC536-F-SPA-AC	1
or	405 019 3903	TR 2SC536-G-SPA-AC	1
Q358	405 019 2807	TR 2SC536-F-SPA-AC	1
or	405 019 3903	TR 2SC536-G-SPA-AC	1
Q359	405 024 9907	TR 2SD734-F	1
Q360	405 018 2600	TR 2SC3400	1
Q361	405 006 6702	TR 2SA984-F	1
or	405 006 6504	TR 2SA984-E	1
Q362	405 018 2600	TR 2SC3400	1
Q363	405 006 6702	TR 2SA984-F	1
or	405 006 6504	TR 2SA984-E	1
Q364	405 018 2600	TR 2SC3400	1
Q365	405 006 6702	TR 2SA984-F	1
or	405 006 6504	TR 2SA984-E	1
Q366	405 013 7006	TR 2SC2274-F	1
or	405 013 6801	TR 2SC2274-E	1
Q367	405 018 2600	TR 2SC3400	1
Q368	405 008 6700	TR 2SB808-F	1
Q369	405 018 2600	TR 2SC3400	1
Q370	405 008 6700	TR 2SB808-F	1
Q371	405 004 4601	TR 2SA608-F-SPA-AC	1
or	405 004 5103	TR 2SA608-G-SPA-AC	1
Q372	405 019 2807	TR 2SC536-F-SPA-AC	1
or	405 019 3903	TR 2SC536-G-SPA-AC	1
Q373	405 019 2807	TR 2SC536-F-SPA-AC	1
or	405 019 3903	TR 2SC536-G-SPA-AC	1
Q374	405 003 7702	TR 2SA1346	1
Q375	405 018 2600	TR 2SC3400	1
Q376	405 003 7702	TR 2SA1346	1
Q377	405 018 2600	TR 2SC3400	1
Q378	405 018 2600	TR 2SC3400	1
Q379	405 018 2600	TR 2SC3400-AC	1
D301	407 008 0405	DIODE GMB01-BT	1
D302	407 005 3805	DIODE DS442-BT	1
D303	407 008 0405	DIODE GMB01-BT	1
D304	407 008 0405	DIODE GMB01-BT	1
D306	407 005 3805	DIODE DS442-BT	1
D307	407 005 3805	DIODE DS442-BT	1
D308	407 096 5504	DIODE RL1N4003-E	1
or	407 004 9105	DIODE DSF10C-BT	1
D309	407 096 5504	DIODE RL1N4003-E	1
or	407 004 9105	DIODE DSF10C-BT	1
D310	407 005 3805	DIODE DS442-BT	1
D311	407 005 3805	DIODE DS442-BT	1
D312	407 005 3805	DIODE DS442-BT	1
D313	407 005 3805	DIODE DS442-BT	1
D314	407 005 3805	DIODE DS442-BT	1
D315	407 005 3805	DIODE DS442-BT	1
D316	407 005 3805	DIODE DS442-BT	1
D317	407 005 3805	DIODE DS442-BT	1
D318	407 005 3805	DIODE DS442-BT	1
D319	407 008 0405	DIODE GMB01-BT	1
D320	407 008 0405	DIODE GMB01-BT	1
D321	407 008 0405	DIODE GMB01-BT	1
D322	407 008 0405	DIODE GMB01-BT	1
D323	407 008 0405	DIODE GMB01-BT	1
D324	407 008 0405	DIODE GMB01-BT	1
D325	407 008 0405	DIODE GMB01-BT	1
D326	407 008 0405	DIODE GMB01-BT	1
D327	407 050 5403	ZENER DIODE GZA5.6X	1

Ref. No.	Part No.	Description	Q'ty
D328	407 005 3805	DIODE DS442-BT	1
D329	407 008 0405	DIODE GMB01-BT	1
C301	403 071 6207	CERAMIC 220P K 50V	1
C302	403 071 6207	CERAMIC 220P K 50V	1
C303	403 049 5508	ELECT 10U M 50V	1
C304	403 049 5508	ELECT 10U M 50V	1
C305	403 039 7901	ELECT 100U M 10V	1
C306	403 039 7901	ELECT 100U M 10V	1
C307	403 072 8200	CERAMIC 330P K 50V	1
C308	403 072 8200	CERAMIC 330P K 50V	1
C309	403 059 6601	POLYESTER 0.022U K 50V	1
C310	403 059 6601	POLYESTER 0.022U K 50V	1
C311	403 042 3600	ELECT 100U M 16V	1
C312	403 042 3600	ELECT 100U M 16V	1
C313	403 050 3708	ELECT 22U M 50V	1
C314	403 050 3708	ELECT 22U M 50V	1
C315	403 063 0503	POLYESTER 6800P K 50V	1
C316	403 063 0503	POLYESTER 6800P K 50V	1
C317	403 057 8003	POLYESTER 0.012U K 50V	1
C318	403 057 8003	POLYESTER 0.012U K 50V	1
C319	403 049 5508	ELECT 10U M 50V	1
C320	403 049 5508	ELECT 10U M 50V	1
C321	403 074 9205	CERAMIC 680P K 50V	1
C322	403 074 9205	CERAMIC 680P K 50V	1
C323	403 049 5508	ELECT 10U M 50V	1
C324	403 049 5508	ELECT 10U M 50V	1
C325	403 039 7901	ELECT 100U M 10V	1
C326	403 039 7901	ELECT 100U M 10V	1
C327	403 048 7701	ELECT 0.47U M 50V	1
C328	403 044 3004	ELECT 470U M 16V	1
C329	403 059 6601	POLYESTER 0.022U K 50V	1
C330	403 059 6601	POLYESTER 0.022U K 50V	1
C331	403 057 8003	POLYESTER 0.012U K 50V	1
C332	403 057 8003	POLYESTER 0.012U K 50V	1
C333	403 049 5508	ELECT 10U M 50V	1
C334	403 049 5508	ELECT 10U M 50V	1
C335	403 074 6303	CERAMIC 560P K 50V	1
C336	403 001 2309	CERAMIC 0.01U N 16V	1
C337	403 050 3708	ELECT 22U M 50V	1
C338	403 050 3708	ELECT 22U M 50V	1
C339	403 048 7701	ELECT 0.47U M 50V	1
C340	403 048 7701	ELECT 0.47U M 50V	1
C341	403 044 0300	ELECT 47U M 16V	1
C342	403 042 3600	ELECT 100U M 16V	1
C343	403 044 0300	ELECT 47U M 16V	1
C344	403 049 5508	ELECT 10U M 50V	1
C345	403 050 1308	ELECT 2.2U M 50V	1
C346	403 050 1308	ELECT 2.2U M 50V	1
C347	403 049 5508	ELECT 10U M 50V	1
C348	403 049 5508	ELECT 10U M 50V	1
C349	403 074 9205	CERAMIC 680P K 50V	1
C350	403 074 9205	CERAMIC 680P K 50V	1
C351	403 081 4705	POLYPRO 2700P J 100V	1
C352	403 081 4705	POLYPRO 2700P J 100V	1
C353	403 049 1708	ELECT 1U M 50V	1
C354	403 049 1708	ELECT 1U M 50V	1
C355	403 044 3004	ELECT 470U M 16V	1
C356	403 049 5508	ELECT 10U M 50V	1
C357	403 051 2106	ELECT 4.7U M 50V	1
C358	403 051 2106	ELECT 4.7U M 50V	1
C359	403 051 2106	ELECT 4.7U M 50V	1
C360	403 051 2106	ELECT 4.7U M 50V	1
C361	403 051 2106	ELECT 4.7U M 50V	1
C362	403 051 2106	ELECT 4.7U M 50V	1
C363	403 058 1607	POLYESTER 1500P K 50V	1
C364	403 058 1607	POLYESTER 1500P K 50V	1
C365	403 050 1308	ELECT 2.2U M 50V	1
C366	403 050 1308	ELECT 2.2U M 50V	1
C367	403 067 6709	MT-COMPO 0.22U J 50V	1
C368	403 067 6709	MT-COMPO 0.22U J 50V	1
C369	403 047 9706	ELECT 0.1U M 50V	1
C370	403 047 9706	ELECT 0.1U M 50V	1
C371	403 048 7701	ELECT 0.47U M 50V	1
C372	403 048 7701	ELECT 0.47U M 50V	1
C373	403 042 0302	ELECT 10U M 16V	1
C374	403 042 0302	ELECT 10U M 16V	1
C375	403 049 1708	ELECT 1U M 50V	1
C376	403 049 1708	ELECT 1U M 50V	1
C377	403 059 0401	POLYESTER 0.018U K 50V	1

P.C.BOARD PARTS LIST (Continued)

Ref. No.	Part No.	Description	Q'ty
C378	403 059 0401	POLYESTER 0.018U K 50V	1
C379	403 058 3700	POLYESTER 0.015U K 50V	1
C380	403 058 3700	POLYESTER 0.015U K 50V	1
C381	403 060 2807	POLYESTER 0.027U K 50V	1
C382	403 060 2807	POLYESTER 0.027U K 50V	1
C383	403 061 4404	POLYESTER 0.039U K 50V	1
C384	403 061 4404	POLYESTER 0.039U K 50V	1
C385	403 073 7004	CERAMIC 470P K 50V	1
C386	403 073 7004	CERAMIC 470P K 50V	1
C387	403 042 3600	ELECT 100U M 16V	1
C388	403 050 1308	ELECT 2.2U M 50V	1
C389	403 050 1308	ELECT 2.2U M 50V	1
C390	403 050 1308	ELECT 2.2U M 50V	1
C391	403 045 0606	ELECT 100U M 25V	1
C393	403 001 2309	CERAMIC 0.01U N 16V	1
C394	403 039 7901	ELECT 100U M 10V	1
C395	403 046 4603	ELECT 33U M 25V	1
C396	403 057 0908	POLYESTER 0.01U K 50V	1
C397	403 042 3600	ELECT 100U M 16V	1
C398	403 083 2105	POLYPRO 0.01U J 250V	1
C399	403 071 6207	CERAMIC 220P K 50V	1
C400	403 071 6207	CERAMIC 220P K 50V	1
C401	403 038 2402	ELECT 100U M 6.3V	1
C402	403 001 2309	CERAMIC 0.01U N 16V	1
C403	403 048 7701	ELECT 0.47U M 50V	1
C404	403 051 2106	ELECT 4.7U M 50V	1
C405	403 069 1207	CERAMIC 1000P K 50V	1
C406	403 042 3600	ELECT 100U M 16V	1
C407	403 051 2106	ELECT 4.7U M 50V	1
C408	403 039 7901	ELECT 100U M 10V	1
C409	403 067 8208	MT-COMPO 0.068U J 50V	1
C410	403 038 2402	ELECT 100U M 6.3V	1
C411	403 042 3600	ELECT 100U M 16V	1
C412	403 051 2106	ELECT 4.7U M 50V	1
C413	403 039 7901	ELECT 100U M 10V	1
C414	403 067 8208	MT-COMPO 0.068U J 50V	1
C415	403 001 2309	CERAMIC 0.01U N 16V	1
C416	403 042 3600	ELECT 100U M 16V	1
C417	403 057 0908	POLYESTER 0.01U K 50V	1
C418	403 050 1308	ELECT 2.2U M 50V	1
C419	403 042 3600	ELECT 100U M 16V	1
C420	403 044 3004	ELECT 470U M 16V	1
C431	403 071 6207	CERAMIC 220P K 50V	1
C432	403 071 6207	CERAMIC 220P K 50V	1
C433	403 051 2106	ELECT 4.7U M 50V	1
C434	403 051 2106	ELECT 4.7U M 50V	1
C435	403 026 2209	CERAMIC 47P J 50V	1
C436	403 026 2209	CERAMIC 47P J 50V	1
C437	403 044 0300	ELECT 47U M 16V	1
C438	403 044 0300	ELECT 47U M 16V	1
C439	403 059 0401	POLYESTER 0.018U K 50V	1
C440	403 059 0401	POLYESTER 0.018U K 50V	1
C441	403 061 8709	POLYESTER 4700P K 50V	1
C442	403 061 8709	POLYESTER 4700P K 50V	1
C443	403 049 1708	ELECT 1U M 50V	1
C444	403 049 1708	ELECT 1U M 50V	1
C445	403 047 4305	ELECT 47U M 25V	1
C446	403 047 4305	ELECT 47U M 25V	1
C447	403 047 4305	ELECT 47U M 25V	1
C448	403 047 4305	ELECT 47U M 25V	1
C449	403 051 2106	ELECT 4.7U M 50V	1
C450	403 051 2106	ELECT 4.7U M 50V	1
C451	403 049 5508	ELECT 10U M 50V	1
C452	403 049 5508	ELECT 10U M 50V	1
C453	403 069 5205	CERAMIC 0.01U K 50V	1
C454	403 049 5508	ELECT 10U M 50V	1
C455	403 047 9706	ELECT 0.1U M 50V	1
C456	403 069 5205	CERAMIC 0.01U K 50V	1
C457	403 049 5508	ELECT 10U M 50V	1
C458	403 069 5205	CERAMIC 0.01U K 50V	1
C459	403 049 5508	ELECT 10U M 50V	1
C460	403 047 9706	ELECT 0.1U M 50V	1
C461	403 069 5205	CERAMIC 0.01U K 50V	1
C462	403 049 5508	ELECT 10U M 50V	1
C463	403 069 1207	CERAMIC 1000P K 50V	1
C465	403 049 5508	ELECT 10U M 50V	1
C466	403 049 5508	ELECT 10U M 50V	1
C467	403 051 2106	ELECT 4.7U M 50V	1
C468	403 051 2106	ELECT 4.7U M 50V	1

Ref. No.	Part No.	Description	Q'ty
C473	403 045 0606	ELECT 100U M 25V	1
C474	403 045 0606	ELECT 100U M 25V	1
C475	403 067 7904	MT-COMPO 0.056U J 50V	1
C476	403 067 7904	MT-COMPO 0.056U J 50V	1
C479	403 070 4105	CERAMIC 120P K 50V	1
C480	403 070 4105	CERAMIC 120P K 50V	1
C481	403 050 3708	ELECT 22U M 50V	1
C482	403 050 3708	ELECT 22U M 50V	1
C483	403 067 7409	MT-COMPO 0.039U J 50V	1
C484	403 067 7409	MT-COMPO 0.039U J 50V	1
C485	403 033 9406	CERAMIC 820P K 50V	1
R301	401 025 8703	CARBON 220K JA 1/6W	1
R302	401 025 8703	CARBON 220K JA 1/6W	1
R303	401 024 8001	CARBON 1M JA 1/6W	1
R304	401 024 8001	CARBON 1M JA 1/6W	1
R305	401 026 9600	CARBON 470 JA 1/6W	1
R306	401 026 9600	CARBON 470 JA 1/6W	1
R307	401 027 2105	CARBON 56 JA 1/6W	1
R308	401 027 2105	CARBON 56 JA 1/6W	1
R309	401 025 8208	CARBON 22K JA 1/6W	1
R310	401 025 8208	CARBON 22K JA 1/6W	1
R311	401 024 7400	CARBON 10K JA 1/6W	1
R312	401 013 5301	CARBON 1.2K JA 1/4W	1
R313	401 027 2600	CARBON 5.6K JA 1/6W	1
R314	401 027 2600	CARBON 5.6K JA 1/6W	1
R315	401 025 0004	CARBON 120K JA 1/6W	1
R316	401 025 0004	CARBON 120K JA 1/6W	1
R317	401 016 4806	CARBON 22K JA 1/4W	1
R318	401 025 8208	CARBON 22K JA 1/6W	1
R319	401 026 9907	CARBON 4.7K JA 1/6W	1
R320	401 026 9907	CARBON 4.7K JA 1/6W	1
R321	401 025 1902	CARBON 15K JA 1/6W	1
R322	401 014 5201	CARBON 15K JA 1/4W	1
R323	401 026 4605	CARBON 33K JA 1/6W	1
R324	401 024 7004	CARBON 1K JA 1/6W	1
R325	401 014 5201	CARBON 15K JA 1/4W	1
R326	401 025 1902	CARBON 15K JA 1/6W	1
R327	401 026 7002	CARBON 3.9K JA 1/6W	1
R328	401 026 7002	CARBON 3.9K JA 1/6W	1
R329	401 024 8001	CARBON 1M JA 1/6W	1
R330	401 024 8001	CARBON 1M JA 1/6W	1
R331	401 027 2600	CARBON 5.6K JA 1/6W	1
R332	401 027 2600	CARBON 5.6K JA 1/6W	1
R333	401 024 8001	CARBON 1M JA 1/6W	1
R334	401 024 8001	CARBON 1M JA 1/6W	1
R337	401 027 3003	CARBON 56K JA 1/6W	1
R338	401 027 3003	CARBON 56K JA 1/6W	1
R339	401 027 3003	CARBON 56K JA 1/6W	1
R340	401 016 2604	CARBON 220 JA 1/4W	1
R341	401 027 8602	CARBON 8.2K JA 1/6W	1
R342	401 027 8602	CARBON 8.2K JA 1/6W	1
R343	401 027 3003	CARBON 56K JA 1/6W	1
R344	401 027 3003	CARBON 56K JA 1/6W	1
R345	401 027 3003	CARBON 56K JA 1/6W	1
R346	401 027 9005	CARBON 82K JA 1/6W	1
R347	401 024 7400	CARBON 10K JA 1/6W	1
R348	401 027 9005	CARBON 82K JA 1/6W	1
R349	401 024 7400	CARBON 10K JA 1/6W	1
R350	401 025 8208	CARBON 22K JA 1/6W	1
R351	401 025 8703	CARBON 220K JA 1/6W	1
R352	401 025 8703	CARBON 220K JA 1/6W	1
R353	401 026 9600	CARBON 470 JA 1/6W	1
R354	401 026 9600	CARBON 470 JA 1/6W	1
R355	401 027 2105	CARBON 56 JA 1/6W	1
R356	401 027 2105	CARBON 56 JA 1/6W	1
R357	401 027 2600	CARBON 5.6K JA 1/6W	1
R358	401 027 2600	CARBON 5.6K JA 1/6W	1
R359	401 025 0004	CARBON 120K JA 1/6W	1
R360	401 025 0004	CARBON 120K JA 1/6W	1
R361	401 025 8208	CARBON 22K JA 1/6W	1
R362	401 025 8208	CARBON 22K JA 1/6W	1
R363	401 026 9907	CARBON 4.7K JA 1/6W	1
R364	401 026 9907	CARBON 4.7K JA 1/6W	1
R365	401 025 1902	CARBON 15K JA 1/6W	1
R366	401 025 1902	CARBON 15K JA 1/6W	1
R367	401 027 2600	CARBON 5.6K JA 1/6W	1
R368	401 027 2600	CARBON 5.6K JA 1/6W	1
R369	401 024 8001	CARBON 1M JA 1/6W	1
R370	401 024 8001	CARBON 1M JA 1/6W	1

P.C.BOARD PARTS LIST (Continued)

Ref. No.	Part No.	Description	Q'ty
R371	401 027 5502	CARBON 6.8K JA 1/6W	1
R372	401 027 5502	CARBON 6.8K JA 1/6W	1
R373	401 017 1804	CARBON 2.7K JA 1/4W	1
R374	401 019 1901	CARBON 3.9K JA 1/4W	1
R375	401 025 7805	CARBON 2.2K JA 1/6W	1
R376	401 025 2305	CARBON 150K JA 1/6W	1
R378	401 026 9600	CARBON 470 JA 1/6W	1
R379	401 022 3107	CARBON 6.8K JA 1/4W	1
R381	401 025 8208	CARBON 22K JA 1/6W	1
R382	401 025 8208	CARBON 22K JA 1/6W	1
R383	401 025 4903	CARBON 180K JA 1/6W	1
R384	401 025 4903	CARBON 180K JA 1/6W	1
R385	401 012 8105	CARBON 100K JA 1/4W	1
R386	401 012 8105	CARBON 100K JA 1/4W	1
R387	401 025 0004	CARBON 120K JA 1/6W	1
R388	401 025 0004	CARBON 120K JA 1/6W	1
R389	401 013 4205	CARBON 120 JA 1/4W	1
R390	401 013 4205	CARBON 120 JA 1/4W	1
R391	401 027 2600	CARBON 5.6K JA 1/6W	1
R392	401 027 2600	CARBON 5.6K JA 1/6W	1
R393	401 026 4605	CARBON 33K JA 1/6W	1
R394	401 026 4605	CARBON 33K JA 1/6W	1
R395	401 026 4308	CARBON 3.3K JA 1/6W	1
R396	401 026 4308	CARBON 3.3K JA 1/6W	1
R399	401 024 7004	CARBON 1K JA 1/6W	1
R400	401 024 7400	CARBON 10K JA 1/6W	1
R401	401 025 8208	CARBON 22K JA 1/6W	1
R402	401 027 8602	CARBON 8.2K JA 1/6W	1
R403	401 027 8602	CARBON 8.2K JA 1/6W	1
R404	401 021 1906	CARBON 560 JA 1/4W	1
R405	401 024 7400	CARBON 10K JA 1/6W	1
R406	401 024 7400	CARBON 10K JA 1/6W	1
R407	401 025 8208	CARBON 22K JA 1/6W	1
R408	401 144 9308	MT-FILM 18K GA 1/6W	1
R409	401 027 0309	CARBON 47K JA 1/6W	1
R410	401 027 0309	CARBON 47K JA 1/6W	1
R411	401 027 5908	CARBON 68K JA 1/6W	1
R412	401 027 5908	CARBON 68K JA 1/6W	1
R413	401 026 9907	CARBON 4.7K JA 1/6W	1
R414	401 020 2003	CARBON 4.7K JA 1/4W	1
R419	401 027 3003	CARBON 56K JA 1/6W	1
R420	401 027 3003	CARBON 56K JA 1/6W	1
R421	401 025 8208	CARBON 22K JA 1/6W	1
R422	401 025 8208	CARBON 22K JA 1/6W	1
R423	401 026 7408	CARBON 39K JA 1/6W	1
R424	401 026 7408	CARBON 39K JA 1/6W	1
R425	401 026 7408	CARBON 39K JA 1/6W	1
R426	401 026 7408	CARBON 39K JA 1/6W	1
R427	401 025 8703	CARBON 220K JA 1/6W	1
R428	401 025 8703	CARBON 220K JA 1/6W	1
R429	401 025 0004	CARBON 120K JA 1/6W	1
R430	401 025 0004	CARBON 120K JA 1/6W	1
R431	401 024 7400	CARBON 10K JA 1/6W	1
R432	401 024 7400	CARBON 10K JA 1/6W	1
R433	401 027 2600	CARBON 5.6K JA 1/6W	1
R434	401 027 2600	CARBON 5.6K JA 1/6W	1
R435	401 026 4308	CARBON 3.3K JA 1/6W	1
R436	401 026 4308	CARBON 3.3K JA 1/6W	1
R437	401 026 9907	CARBON 4.7K JA 1/6W	1
R438	401 026 9907	CARBON 4.7K JA 1/6W	1
R439	401 025 8208	CARBON 22K JA 1/6W	1
R440	401 025 8208	CARBON 22K JA 1/6W	1
R441	401 027 2600	CARBON 5.6K JA 1/6W	1
R442	401 027 2600	CARBON 5.6K JA 1/6W	1
R443	401 027 8602	CARBON 8.2K JA 1/6W	1
R444	401 027 8602	CARBON 8.2K JA 1/6W	1
R445	401 024 9701	CARBON 12K JA 1/6W	1
R446	401 024 9701	CARBON 12K JA 1/6W	1
R447	401 024 7707	CARBON 100K JA 1/6W	1
R448	401 024 7707	CARBON 100K JA 1/6W	1
R449	401 026 3400	CARBON 300K JA 1/6W	1
R450	401 026 3400	CARBON 300K JA 1/6W	1
R451	401 026 4605	CARBON 33K JA 1/6W	1
R452	401 026 4605	CARBON 33K JA 1/6W	1
R453	401 027 6905	CARBON 750 JA 1/6W	1
R454	401 027 6905	CARBON 750 JA 1/6W	1
R455	401 024 9701	CARBON 12K JA 1/6W	1
R456	401 024 9701	CARBON 12K JA 1/6W	1
R457	401 025 8703	CARBON 220K JA 1/6W	1

Ref. No.	Part No.	Description	Q'ty
R458	401 025 8703	CARBON 220K JA 1/6W	1
R459	401 026 0607	CARBON 270 JA 1/6W	1
R460	401 026 0607	CARBON 270 JA 1/6W	1
R461	401 024 9008	CARBON 120 JA 1/6W	1
R462	401 024 9008	CARBON 120 JA 1/6W	1
R463	401 025 1605	CARBON 1.5K JA 1/6W	1
R464	401 025 1605	CARBON 1.5K JA 1/6W	1
R465	401 026 7002	CARBON 3.9K JA 1/6W	1
R466	401 026 7002	CARBON 3.9K JA 1/6W	1
R467	401 026 1000	CARBON 2.7K JA 1/6W	1
R468	401 026 1000	CARBON 2.7K JA 1/6W	1
R469	401 025 1605	CARBON 1.5K JA 1/6W	1
R470	401 025 1605	CARBON 1.5K JA 1/6W	1
R471	401 024 7400	CARBON 10K JA 1/6W	1
R472	401 020 0801	CARBON 470 JA 1/4W	1
R473	401 024 7400	CARBON 10K JA 1/6W	1
R474	401 024 7400	CARBON 10K JA 1/6W	1
R475	401 024 7707	CARBON 100K JA 1/6W	1
R476	401 024 7707	CARBON 100K JA 1/6W	1
R477	401 021 3009	CARBON 5.6K JA 1/4W	1
R478	401 027 2600	CARBON 5.6K JA 1/6W	1
R479	401 024 9305	CARBON 1.2K JA 1/6W	1
R480	401 020 0801	CARBON 470 JA 1/4W	1
R481	401 024 7707	CARBON 100K JA 1/6W	1
R482	401 024 7004	CARBON 1K JA 1/6W	1
R483	401 024 7707	CARBON 100K JA 1/6W	1
R484	401 024 7707	CARBON 100K JA 1/6W	1
R485	401 024 7707	CARBON 100K JA 1/6W	1
R486	401 024 7400	CARBON 10K JA 1/6W	1
R487	401 024 7707	CARBON 100K JA 1/6W	1
R488	401 024 7400	CARBON 10K JA 1/6W	1
R489	401 026 9600	CARBON 470 JA 1/6W	1
R490	401 024 7707	CARBON 100K JA 1/6W	1
R491	401 027 9005	CARBON 82K JA 1/6W	1
R492	401 012 7009	CARBON 10K JA 1/4W	1
R493	401 024 7400	CARBON 10K JA 1/6W	1
R494	401 026 9907	CARBON 4.7K JA 1/6W	1
R495	401 024 7400	CARBON 10K JA 1/6W	1
R496	401 026 9907	CARBON 4.7K JA 1/6W	1
R497	401 024 7400	CARBON 10K JA 1/6W	1
R498	401 026 9907	CARBON 4.7K JA 1/6W	1
R499	401 024 7400	CARBON 10K JA 1/6W	1
R500	401 019 7309	CARBON 430 JA 1/4W	1
R501	401 056 1209	OXIDE-MT 390 JB 1/2W	1
R502	401 055 9107	OXIDE-MT 33 JB 1/2W	1
R503	401 024 7400	CARBON 10K JA 1/6W	1
R504	401 024 7400	CARBON 10K JA 1/6W	1
R505	401 024 6403	CARBON 10 JA 1/6W	1
R506	401 025 7102	CARBON 22 JA 1/6W	1
R507	401 026 9907	CARBON 4.7K JA 1/6W	1
R508	401 024 9008	CARBON 120 JA 1/6W	1
R509	401 026 6609	CARBON 390 JA 1/6W	1
R510	401 012 4503	CARBON 100 JA 1/4W	1
R511	402 015 4309	FUSIBLE RES 33 J- 1/4W	1
R512	401 024 7707	CARBON 100K JA 1/6W	1
R513	401 027 2105	CARBON 56 JA 1/6W	1
R514	401 025 1902	CARBON 15K JA 1/6W	1
R515	401 024 7004	CARBON 1K JA 1/6W	1
R516	401 026 9600	CARBON 470 JA 1/6W	1
R517	401 027 0309	CARBON 47K JA 1/6W	1
R518	401 026 9907	CARBON 4.7K JA 1/6W	1
R519	401 024 9008	CARBON 120 JA 1/6W	1
R520	401 026 6609	CARBON 390 JA 1/6W	1
R521	401 095 1208	MT-FILM 620 JV 1/4W	1
R522	401 095 1208	MT-FILM 620 JV 1/4W	1
R523	401 012 4503	CARBON 100 JA 1/4W	1
R524	402 015 4309	FUSIBLE RES 33 J- 1/4W	1
R525	401 012 8105	CARBON 100K JA 1/4W	1
R526	401 027 2105	CARBON 56 JA 1/6W	1
R527	401 025 1902	CARBON 15K JA 1/6W	1
R528	401 012 5708	CARBON 1K JA 1/4W	1
R529	401 026 9600	CARBON 470 JA 1/6W	1
R530	401 027 0309	CARBON 47K JA 1/6W	1
R531	401 017 0807	CARBON 270 JA 1/4W	1
R532	401 012 7009	CARBON 10K JA 1/4W	1
R533	401 012 7009	CARBON 10K JA 1/4W	1
R534	401 013 5301	CARBON 1.2K JA 1/4W	1
R535	401 025 8208	CARBON 22K JA 1/6W	1
R536	401 024 7400	CARBON 10K JA 1/6W	1

P.C.BOARD PARTS LIST (Continued)

Ref. No.	Part No.	Description	Q'ty
R541	401 024 7004	CARBON 1K JA 1/6W	1
R542	401 024 7004	CARBON 1K JA 1/6W	1
R543	401 024 7707	CARBON 100K JA 1/6W	1
R544	401 024 7707	CARBON 100K JA 1/6W	1
R545	401 024 7707	CARBON 100K JA 1/6W	1
R546	401 024 7707	CARBON 100K JA 1/6W	1
R547	401 026 0607	CARBON 270 JA 1/6W	1
R548	401 026 0607	CARBON 270 JA 1/6W	1
R549	401 025 8703	CARBON 220K JA 1/6W	1
R550	401 025 8703	CARBON 220K JA 1/6W	1
R551	401 025 1902	CARBON 15K JA 1/6W	1
R552	401 025 1902	CARBON 15K JA 1/6W	1
R553	401 027 3003	CARBON 56K JA 1/6W	1
R554	401 027 3003	CARBON 56K JA 1/6W	1
R555	401 012 5708	CARBON 1K JA 1/4W	1
R556	401 012 5708	CARBON 1K JA 1/4W	1
R557	401 026 0607	CARBON 270 JA 1/6W	1
R558	401 026 0607	CARBON 270 JA 1/6W	1
R559	401 017 0807	CARBON 270 JA 1/4W	1
R560	401 017 0807	CARBON 270 JA 1/4W	1
R561	401 025 8703	CARBON 220K JA 1/6W	1
R562	401 025 8703	CARBON 220K JA 1/6W	1
R563	401 024 7707	CARBON 100K JA 1/6W	1
R564	402 015 4309	FUSIBLE RES 33 J- 1/4W	1
R565	402 015 4309	FUSIBLE RES 33 J- 1/4W	1
R566	402 015 4309	FUSIBLE RES 33 J- 1/4W	1
R567	402 015 4309	FUSIBLE RES 33 J- 1/4W	1
R568	401 024 7707	CARBON 100K JA 1/6W	1
R569	401 024 7004	CARBON 1K JA 1/6W	1
R570	401 024 7004	CARBON 1K JA 1/6W	1
R571	401 026 7408	CARBON 39K JA 1/6W	1
R572	401 026 7408	CARBON 39K JA 1/6W	1
R573	401 024 7004	CARBON 1K JA 1/6W	1
R574	401 024 7004	CARBON 1K JA 1/6W	1
R575	401 026 7408	CARBON 39K JA 1/6W	1
R576	401 026 7408	CARBON 39K JA 1/6W	1
R577	401 024 7400	CARBON 10K JA 1/6W	1
R578	401 024 7400	CARBON 10K JA 1/6W	1
R579	401 026 7408	CARBON 39K JA 1/6W	1
R580	401 026 7408	CARBON 39K JA 1/6W	1
R581	401 024 7004	CARBON 1K JA 1/6W	1
R582	401 024 7004	CARBON 1K JA 1/6W	1
R583	401 026 7408	CARBON 39K JA 1/6W	1
R584	401 026 7408	CARBON 39K JA 1/6W	1
R585	401 024 7004	CARBON 1K JA 1/6W	1
R586	401 024 7004	CARBON 1K JA 1/6W	1
R587	401 026 7606	CARBON 390K JA 1/6W	1
R588	401 026 7606	CARBON 390K JA 1/6W	1
R589	401 026 0607	CARBON 270 JA 1/6W	1
R590	401 026 0607	CARBON 270 JA 1/6W	1
R591	401 012 5708	CARBON 1K JA 1/4W	1
R592	401 024 7004	CARBON 1K JA 1/6W	1
R593	401 024 7707	CARBON 100K JA 1/6W	1
R594	401 024 7707	CARBON 100K JA 1/6W	1
R595	401 024 7707	CARBON 100K JA 1/6W	1
R596	401 024 7707	CARBON 100K JA 1/6W	1
R597	401 026 9600	CARBON 470 JA 1/6W	1
R598	401 026 9600	CARBON 470 JA 1/6W	1
R599	401 026 9907	CARBON 4.7K JA 1/6W	1
R600	401 026 9907	CARBON 4.7K JA 1/6W	1
R603	401 024 6700	CARBON 100 JA 1/6W	1
R604	401 024 6700	CARBON 100 JA 1/6W	1
R605	401 026 0607	CARBON 270 JA 1/6W	1
R606	401 026 0607	CARBON 270 JA 1/6W	1
R607	401 012 5708	CARBON 1K JA 1/4W	1
R608	401 024 7004	CARBON 1K JA 1/6W	1
R609	401 024 7707	CARBON 100K JA 1/6W	1
R610	401 024 7707	CARBON 100K JA 1/6W	1
R611	401 027 5908	CARBON 68K JA 1/6W	1
R612	401 027 5908	CARBON 68K JA 1/6W	1
R613	401 027 3003	CARBON 56K JA 1/6W	1
R614	401 027 3003	CARBON 56K JA 1/6W	1
R615	401 026 1307	CARBON 27K JA 1/6W	1
R616	401 026 1307	CARBON 27K JA 1/6W	1
R617	401 026 4605	CARBON 33K JA 1/6W	1
R618	401 026 4605	CARBON 33K JA 1/6W	1
R619	401 026 9907	CARBON 4.7K JA 1/6W	1
R620	401 026 9907	CARBON 4.7K JA 1/6W	1
R621	401 012 5708	CARBON 1K JA 1/4W	1
R622	401 024 7004	CARBON 1K JA 1/6W	1
R623	401 024 7707	CARBON 100K JA 1/6W	1
R624	401 024 7707	CARBON 100K JA 1/6W	1
R625	401 024 7707	CARBON 100K JA 1/6W	1
R626	401 024 7707	CARBON 100K JA 1/6W	1
R627	401 026 4605	CARBON 33K JA 1/6W	1
R628	401 026 4605	CARBON 33K JA 1/6W	1
R629	401 012 4503	CARBON 100 JA 1/4W	1
R630	401 024 6700	CARBON 100 JA 1/6W	1
R631	401 026 1307	CARBON 27K JA 1/6W	1
R632	401 026 1307	CARBON 27K JA 1/6W	1
R633	401 027 2600	CARBON 5.6K JA 1/6W	1
R634	401 021 3009	CARBON 5.6K JA 1/4W	1
R635	401 027 8602	CARBON 8.2K JA 1/6W	1
R636	401 023 2802	CARBON 8.2K JA 1/4W	1
ASSY,PCB,MAIN POWER			
55	620 196 5551	Assy,PCB,Main Power	1
	620 017 2721	Fuse Clip	12
	620 022 2587	EC Terminal 1P	2
	620 187 4044	Push Terminal 8P	1
	411 020 8004	SCR S-TPG BRZ 3X8	4
	411 002 8602	SCR PAN 3X6	1
	620 031 4763	Wire Wrap Terminal	6
	620 053 7025	Cover Safety	1
	620 053 9012	Plate Heat Sink	2
	620 053 9036	Plate Heat Sink	1
	620 055 2769	Jumper	1
CA959	620 191 7079	Connector 1P Assy	1
CN951	620 021 5923	Plug 3P	1
CN952	620 021 8344	Plug 10P	1
CN953	620 021 9204	Plug 5P	1
CN954	620 021 8337	Plug 6P	1
CN955	620 021 6548	Plug 2P	1
CN956	620 191 6249	Plug 9P	1
CN957	620 021 7620	Plug 2P	1
CN958	620 021 5947	Plug 5P	1
C967 ⚠	620 006 6679	Capacitor 0.01MF400V	1
F951 ⚠	423 006 8700	FUSE 250V T 3.15A	1
F952 ⚠	423 006 8700	FUSE 250V T 3.15A	1
F953 ⚠	423 007 2103	FUSE 250V T 4A	1
F954 ⚠	423 007 2103	FUSE 250V T 4A	1
F956 ⚠	423 005 7605	FUSE 250V T 1.25A	1
F957 ⚠	423 005 7605	FUSE 250V T 1.25A	1
L951	620 026 5447	RF Filter	1
L952	620 026 5447	RF Filter	1
RY951	620 017 0406	Relay	1
RY952	620 188 2483	Relay	1
IC951	409 102 0701	IC STK4152MK2-M	1
Q951	405 039 5802	TR 2SC3792	1
Q952	405 039 5802	TR 2SC3792	1
Q953	405 018 2600	TR 2SC3400	1
Q954	405 018 2600	TR 2SC3400	1
Q955	405 019 2807	TR 2SC536-F-SPA-AC	1
or	405 019 3903	TR 2SC536-G-SPA-AC	1
Q956	405 019 2807	TR 2SC536-F-SPA-AC	1
or	405 019 3903	TR 2SC536-G-SPA-AC	1
Q957	405 021 0600	TR 2SD1012-G-SPA-AC	1
or	405 021 0907	TR 2SD1012-H-SPA-AC	1
Q958	405 021 0600	TR 2SD1012-G-SPA-AC	1
or	405 021 0907	TR 2SD1012-H-SPA-AC	1
Q959	405 052 8002	TR 2SB1274-R	1
or	405 052 8101	TR 2SB1274-S	1
Q960	405 073 6407	TR 2SK772-E	1
Q961	405 035 7107	TR 2SD1913-R	1
or	405 035 7206	TR 2SD1913-S	1
Q962	405 073 6407	TR 2SK772-E	1
Q963	405 035 7107	TR 2SD1913-R	1
or	405 035 7206	TR 2SD1913-S	1
Q964	405 035 7107	TR 2SD1913-R	1
or	405 035 7206	TR 2SD1913-S	1
Q965	405 073 6506	TR 2SK772-F	1
Q966	405 035 7107	TR 2SD1913-R	1
or	405 035 7206	TR 2SD1913-S	1
Q967	405 008 4904	TR 2SB764-F	1
or	405 008 4805	TR 2SB764-E	1
D951	407 050 5502	ZENER DIODE GZA5.6Y-BT	1
D952	407 049 6305	ZENER DIODE GZA12Y-BT	1
D953	407 049 7005	ZENER DIODE GZA15Y-BT	1

P.C.BOARD PARTS LIST (Continued)

Ref. No.	Part No.	Description	Q'ty
D954	407 050 5502	ZENER DIODE GZA5.6Y-BT	1
D955	407 049 7708	ZENER DIODE GZA18X-BT	1
D956	407 049 7708	ZENER DIODE GZA18X-BT	1
D957	407 092 4105	DIODE DSA20TC-KD3	1
D958	407 092 4105	DIODE DSA20TC-KD3	1
D959	407 092 4105	DIODE DSA20TC-KD3	1
D960	407 092 4105	DIODE DSA20TC-KD3	1
D961	407 092 3900	DIODE DSB15TC-KC5	1
D962	407 092 3900	DIODE DSB15TC-KC5	1
D963	407 109 4708	DIODE 1N4003-K	1
or	407 005 2105	DIODE DS135D-KB3	1
D964	407 109 4708	DIODE 1N4003-K	1
or	407 005 2105	DIODE DS135D-KB3	1
D965	407 051 0605	ZENER DIODE GZB24B	1
D966	407 051 3002	ZENER DIODE GZB5.6C	1
D967	407 096 5504	DIODE RL1N4003-E	1
or	407 004 9105	DIODE DSF10C-BT	1
D968	407 096 5504	DIODE RL1N4003-E	1
or	407 004 9105	DIODE DSF10C-BT	1
D969	407 008 0405	DIODE GMB01-BT	1
C951	403 073 7004	CERAMIC 470P K 50V	1
C952	403 073 7004	CERAMIC 470P K 50V	1
C953	403 050 1308	ELECT 2.2U M 50V	1
C954	403 050 1308	ELECT 2.2U M 50V	1
C955	403 068 9402	CERAMIC 100P K 50V	1
C956	403 068 9402	CERAMIC 100P K 50V	1
C957	403 039 7901	ELECT 100U M 10V	1
C958	403 039 7901	ELECT 100U M 10V	1
C959	403 051 3905	ELECT 47U M 50V	1
C960	403 051 3905	ELECT 47U M 50V	1
C961	403 145 9202	ELECT 47U M 50V	1
C962	403 051 3905	ELECT 47U M 50V	1
C963	403 051 3905	ELECT 47U M 50V	1
C964	403 121 0704	ELECT 100U M 63V	1
C965	403 067 5603	MT-COMPO 0.1U J 50V	1
C966	403 067 5603	MT-COMPO 0.1U J 50V	1
C968	403 063 0503	POLYESTER 6800P K 50V	1
C969	403 063 0503	POLYESTER 6800P K 50V	1
C970	403 049 5508	ELECT 10U M 50V	1
C971	403 042 3600	ELECT 100U M 16V	1
C972	403 046 4603	ELECT 33U M 25V	1
C973	403 047 4305	ELECT 47U M 25V	1
C974	403 049 5508	ELECT 10U M 50V	1
C975	403 038 2402	ELECT 100U M 6.3V	1
C976	403 038 2402	ELECT 100U M 6.3V	1
C977	403 047 4305	ELECT 47U M 25V	1
C978	403 049 5508	ELECT 10U M 50V	1
C979	403 047 4305	ELECT 47U M 25V	1
C980	403 049 5508	ELECT 10U M 50V	1
C981	404 031 3502	ELECT 4700U M 50V	1
C982	404 031 3502	ELECT 4700U M 50V	1
C983	404 012 7000	CERAMIC 0.01U P 500V	1
C984	404 012 7000	CERAMIC 0.01U P 500V	1
C985	404 012 7000	CERAMIC 0.01U P 500V	1
C986	404 012 7000	CERAMIC 0.01U P 500V	1
C987	404 012 7000	CERAMIC 0.01U P 500V	1
C988	404 012 7000	CERAMIC 0.01U P 500V	1
C989	403 053 8908	ELECT 3300U M 35V	1
C990	403 136 1604	ELECT 47U M 100V	1
C991	404 012 7000	CERAMIC 0.01U P 500V	1
C992	404 012 7000	CERAMIC 0.01U P 500V	1
C993	403 121 0704	ELECT 100U M 63V	1
C994	403 054 1304	ELECT 47U M 35V	1
C995	403 045 2907	ELECT 1000U M 25V	1
C996	403 054 1304	ELECT 47U M 35V	1
C997	403 044 0300	ELECT 47U M 16V	1
R951	401 012 5708	CARBON 1K JA 1/4W	1
R952	401 012 5708	CARBON 1K JA 1/4W	1
R953	401 020 2003	CARBON 4.7K JA 1/4W	1
R954	401 020 2003	CARBON 4.7K JA 1/4W	1
R955	401 024 7004	CARBON 1K JA 1/6W	1
R956	401 024 7400	CARBON 10K JA 1/6W	1
R957	401 024 7707	CARBON 100K JA 1/6W	1
R958	401 024 7707	CARBON 100K JA 1/6W	1
R959	401 027 3003	CARBON 56K JA 1/6W	1
R960	401 027 3003	CARBON 56K JA 1/6W	1
R961	401 021 1906	CARBON 560 JA 1/4W	1
R962	401 021 1906	CARBON 560 JA 1/4W	1
R963	401 021 4105	CARBON 56K JA 1/4W	1
R964	401 021 4105	CARBON 56K JA 1/4W	1
R965	401 016 3809	CARBON 2.2K JA 1/4W	1
R966	401 016 3809	CARBON 2.2K JA 1/4W	1
R967	401 055 5802	OXIDE-MT 2.2K JA 1/2W	1
R968	401 055 5802	OXIDE-MT 2.2K JA 1/2W	1
R969	402 016 4605	FUSIBLE RES 100 J- 1/2W	1
R970	402 016 4605	FUSIBLE RES 100 J- 1/2W	1
R971	401 027 9005	CARBON 82K JA 1/6W	1
R972	401 027 9005	CARBON 82K JA 1/6W	1
R973	401 012 7009	CARBON 10K JA 1/4W	1
R974	401 012 7009	CARBON 10K JA 1/4W	1
R975	401 024 7400	CARBON 10K JA 1/6W	1
R976	401 024 7400	CARBON 10K JA 1/6W	1
R977	401 058 2600	OXIDE-MT 100 JB 1W	1
R978	401 058 2600	OXIDE-MT 100 JB 1W	1
R979	402 016 5404	FUSIBLE RES 4.7 J- 1/2W	1
R980	402 016 5404	FUSIBLE RES 4.7 J- 1/2W	1
R981	401 024 7400	CARBON 10K JA 1/6W	1
R982	401 024 7400	CARBON 10K JA 1/6W	1
R983	401 061 0105	OXIDE-MT 3.3 JB 1W	1
R984	401 014 4105	CARBON 1.5K JA 1/4W	1
R985	402 016 5404	FUSIBLE RES 4.7 J- 1/2W	1
R986	402 016 4704	FUSIBLE RES 120 J- 1/2W	1
R987	401 017 1804	CARBON 2.7K JA 1/4W	1
R988	401 062 0401	OXIDE-MT 47 JB 1W	1
R989	401 062 0401	OXIDE-MT 47 JB 1W	1
R990	401 062 6205	OXIDE-MT 560 JB 1W	1
R991	401 012 7009	CARBON 10K JA 1/4W	1
R992	401 024 7400	CARBON 10K JA 1/6W	1
R993	401 024 7004	CARBON 1K JA 1/6W	1
ASSY,PCB,TUNER			
56	620 197 4140	Assy,PCB,Tuner	1
	620 000 4138	FM Frontend 4EU AGC	1
	620 182 6647	Digitron 9-BT-34G	1
	620 022 2921	ANT Terminal 3P	1
	411 099 9803	SCR S-TPG BRZ 3X8	1
	620 031 4763	Wire Wrap Terminal	10
	620 190 0521	Cover Shield	1
	620 189 1294	Plate Heat Sink	1
	620 189 5872	Plate Sever	1
CA805	620 191 7079	Connector 1P Assy	1
CN801	620 021 8122	Plug 6P	1
CN802	620 022 0132	Plug 12P	1
CN803	620 021 5923	Plug 3P	1
CN804	620 021 7613	Plug 2P	1
FU801	620 017 0734	Protector ICP-5	1
F801	620 026 9353	FTZ Antenna Filter	1
or	620 191 6607	FTZ Antenna Filter	1
F803	620 014 6036	Ceramic Filter 10.7MHz	1
F804	620 014 6036	Ceramic Filter 10.7MHz	1
F805	620 014 5862	Ceramic Filter 450kHz	1
F806	620 014 5879	Ceramic Filter 450kHz	1
F807	620 014 6258	Ceramic OSC	1
L801	620 197 9336	Inductor 100UH K	1
L802	620 197 9336	Inductor 100UH K	1
L803	620 199 4735	Inductor 470UH J	1
P801	620 197 9848	Potentiometer,50K	1
or	620 006 1322	Semi Fixed 47KB	1
P802	620 190 9623	Potentiometer 33KB	1
or	620 006 1339	Potentiometer 33KB	1
P803	620 190 9609	Potentiometer 100KB	1
or	620 006 1353	Potentiometer 100KB	1
TC801	620 189 9108	Trimmer 20PF	1
or	620 007 0614	Trimmer 20PF	1
TC804	620 189 9108	Trimmer 20PF	1
or	620 007 0614	Trimmer 20PF	1
T801	620 028 1348	MW Antenna Coil	1
T803	620 028 7784	OSC Coil MW	1
T805	620 027 7013	IFT AM	1
T806	620 027 7242	IFT, FM DET 1st	1
T807	620 027 7259	IFT, FM DET 2nd	1
T808	620 026 4396	Anti Birdie Filter	1
T811	620 026 4754	Low Pass Filter	1
T812	620 026 4754	Low Pass Filter	1
X801	620 007 1321	Crystal 7.2MHz	1
or	620 007 1314	Crystal 7.2MHz	1
X802	620 191 5327	Crystal 4.194304MHz	1
IC801	409 073 9505	IC LA1266	1

P.C.BOARD PARTS LIST (Continued)

Ref. No.	Part No.	Description	Q'ty
IC802	409 017 0803	IC LA3400	1
IC804	409 074 0808	IC LA5667	1
IC805	410 065 1605	IC TMP47C870N-4634Z	1
IC806	409 066 7600	IC LM7001	1
Q801	405 027 0505	TR 2SK246-GR	1
Q807	405 004 4502	TR 2SA608-F-NP-AA	1
or	405 004 5004	TR 2SA608-G-NP	1
Q808	405 019 2708	TR 2SC536-F-NP-AA	1
or	405 019 3804	TR 2SC536-G-NP-AA	1
Q809	405 004 4502	TR 2SA608-F-NP-AA	1
or	405 004 5004	TR 2SA608-G-NP	1
Q810	405 019 2708	TR 2SC536-F-NP-AA	1
or	405 019 3804	TR 2SC536-G-NP-AA	1
Q811	405 019 2708	TR 2SC536-F-NP-AA	1
or	405 019 3804	TR 2SC536-G-NP-AA	1
Q812	405 004 4502	TR 2SA608-F-NP-AA	1
or	405 004 5004	TR 2SA608-G-NP	1
Q813	405 021 0204	TR 2SD1012-F-SPA-AC	1
or	405 021 0600	TR 2SD1012-G-SPA-AC	1
Q814	405 021 0204	TR 2SD1012-F-SPA-AC	1
or	405 021 0600	TR 2SD1012-G-SPA-AC	1
Q815	405 085 5900	TR 2SK246-Y1	1
or	405 085 5801	TR 2SK246-Y2	1
Q816	405 016 9502	TR 2SC3069	1
Q818	405 004 4502	TR 2SA608-F-NP-AA	1
or	405 004 5004	TR 2SA608-G-NP	1
Q819	405 016 0905	TR 2SC2839-E-SPA-AC	1
Q820	405 019 2708	TR 2SC536-F-NP-AA	1
or	405 019 3804	TR 2SC536-G-NP-AA	1
Q821	405 019 2708	TR 2SC536-F-NP-AA	1
or	405 019 3804	TR 2SC536-G-NP-AA	1
Q822	405 004 4502	TR 2SA608-F-NP-AA	1
or	405 004 5004	TR 2SA608-G-NP	1
Q823	405 019 2708	TR 2SC536-F-NP-AA	1
or	405 019 3804	TR 2SC536-G-NP-AA	1
Q824	405 017 9501	TR 2SC3330-S-AC	1
or	405 017 9600	TR 2SC3330-T-AC	1
Q825	405 017 9501	TR 2SC3330-S-AC	1
or	405 017 9600	TR 2SC3330-T-AC	1
Q826	405 007 5308	TR 2SB560-F-MP	1
Q827	405 008 6809	TR 2SB808-F-SPA-AC	1
or	405 008 7103	TR 2SB808-G-SPA-AC	1
Q828	405 018 2600	TR 2SC3400-AC	1
Q829	405 008 6809	TR 2SB808-F-SPA-AC	1
or	405 008 7103	TR 2SB808-G-SPA-AC	1
Q830	405 019 2708	TR 2SC536-F-NP-AA	1
or	405 019 3804	TR 2SC536-G-NP-AA	1
D801	407 000 4708	VARACTOR DI SVC321C-2	1
or	407 000 4807	VARACTOR DI SVC321D-2	1
D802	407 000 4708	VARACTOR DI SVC321C-2	1
or	407 000 4807	VARACTOR DI SVC321D-2	1
D805	407 008 0405	DIODE GMB01-BT	1
D806	407 012 8503	DIODE 1SS53	1
D807	407 096 5504	DIODE RL1N4003-E	1
or	407 004 9105	DIODE DSF10C-BT	1
D808	407 096 5504	DIODE RL1N4003-E	1
or	407 004 9105	DIODE DSF10C-BT	1
D809	407 050 0408	ZENER DIODE GZA27Y-BT	1
D810	407 050 6103	ZENER DIODE GZA6.2X-BT	1
D811	407 012 8503	DIODE 1SS53	1
D812	407 005 3805	DIODE DS442-BT	1
D814	407 005 3805	DIODE DS442-BT	1
D815	407 005 3805	DIODE DS442-BT	1
D816	407 005 3805	DIODE DS442-BT	1
D817	407 005 3805	DIODE DS442-BT	1
D818	407 005 3805	DIODE DS442-BT	1
D819	407 005 3805	DIODE DS442-BT	1
D820	407 005 3805	DIODE DS442-BT	1
D821	407 005 3805	DIODE DS442-BT	1
D832	407 008 0405	DIODE GMB01-BT	1
D833	407 008 0405	DIODE GMB01-BT	1
C801	403 074 2701	CERAMIC 0.047U Z 50V	1
C802	403 023 1700	CERAMIC 33P K 50V	1
C804	403 074 2701	CERAMIC 0.047U Z 50V	1
C806	403 069 8404	CERAMIC 0.01U Z 50V	1
C807	403 074 2701	CERAMIC 0.047U Z 50V	1
C808	403 026 5408	CERAMIC 47P K 50V	1
C809	403 074 2701	CERAMIC 0.047U Z 50V	1
C812	403 074 2701	CERAMIC 0.047U Z 50V	1

Ref. No.	Part No.	Description	Q'ty
C814	403 049 5508	ELECT 10U M 50V	1
C815	403 074 2701	CERAMIC 0.047U Z 50V	1
C816	403 074 2701	CERAMIC 0.047U Z 50V	1
C817	403 069 8404	CERAMIC 0.01U Z 50V	1
C818	403 049 5508	ELECT 10U M 50V	1
C819	403 069 8404	CERAMIC 0.01U Z 50V	1
C820	403 049 1708	ELECT 1U M 50V	1
C821	403 038 2402	ELECT 100U M 6.3V	1
C822	403 074 5801	CERAMIC 560P K 50V	1
C824	403 050 7805	ELECT 3.3U M 50V	1
C825	403 069 8404	CERAMIC 0.01U Z 50V	1
C826	403 049 1708	ELECT 1U M 50V	1
C827	403 051 2106	ELECT 4.7U M 50V	1
C828	403 026 5408	CERAMIC 47P K 50V	1
C829	403 051 2106	ELECT 4.7U M 50V	1
C830	403 069 8404	CERAMIC 0.01U Z 50V	1
C832	403 017 7404	CERAMIC 22P J 50V	1
C833	403 088 4104	STYRENE 430P J 50V	1
C838	403 049 5508	ELECT 10U M 50V	1
C839	403 057 0908	POLYESTER 0.01U K 50V	1
C840	403 061 4404	POLYESTER 0.039U K 50V	1
C841	403 044 0300	ELECT 47U M 16V	1
C842	403 061 8709	POLYESTER 4700P K 50V	1
C843	403 072 7906	CERAMIC 330P K 50V	1
C844	403 063 0503	POLYESTER 6800P K 50V	1
C845	403 056 8608	POLYESTER 1000P K 50V	1
C846	403 062 0900	POLYESTER 0.047U K 50V	1
C847	403 049 5508	ELECT 10U M 50V	1
C848	403 069 8404	CERAMIC 0.01U Z 50V	1
C849	403 050 1308	ELECT 2.2U M 50V	1
C850	403 044 0300	ELECT 47U M 16V	1
C851	403 072 4509	CERAMIC 270P K 50V	1
C852	403 072 4509	CERAMIC 270P K 50V	1
C853	403 050 7805	ELECT 3.3U M 50V	1
C854	403 050 7805	ELECT 3.3U M 50V	1
C855	403 061 2608	POLYESTER 3900P K 50V	1
C856	403 061 2608	POLYESTER 3900P K 50V	1
C857	403 048 7701	ELECT 0.47U M 50V	1
C858	403 049 1708	ELECT 1U M 50V	1
C859	403 022 5907	CERAMIC 33P J 50V	1
C860	403 022 5907	CERAMIC 33P J 50V	1
C861	403 069 8404	CERAMIC 0.01U Z 50V	1
C862	403 049 5508	ELECT 10U M 50V	1
C863	403 069 8404	CERAMIC 0.01U Z 50V	1
C864	403 057 0908	POLYESTER 0.01U K 50V	1
C865	403 044 0300	ELECT 47U M 16V	1
C866	403 069 0705	CERAMIC 1000P K 50V	1
C867	403 049 1708	ELECT 1U M 50V	1
C868	403 044 0300	ELECT 47U M 16V	1
C869	403 069 8404	CERAMIC 0.01U Z 50V	1
C870	403 051 2106	ELECT 4.7U M 50V	1
C871	403 069 8404	CERAMIC 0.01U Z 50V	1
C873	404 012 7000	CERAMIC 0.01U P 500V	1
C874	403 053 4405	ELECT 2200U M 35V	1
C875	404 012 7000	CERAMIC 0.01U P 500V	1
C876	403 136 1604	ELECT 47U M 100V	1
C877	403 054 1304	ELECT 47U M 35V	1
C878	403 054 1304	ELECT 47U M 35V	1
C879	403 044 0300	ELECT 47U M 16V	1
C880	403 049 5508	ELECT 10U M 50V	1
C881	403 050 3708	ELECT 22U M 50V	1
C882	403 049 1708	ELECT 1U M 50V	1
C883	403 026 5408	CERAMIC 47P K 50V	1
C884	403 026 5408	CERAMIC 47P K 50V	1
C885	403 069 0705	CERAMIC 1000P K 50V	1
C886	403 017 7404	CERAMIC 22P J 50V	1
C887	403 038 2402	ELECT 100U M 6.3V	1
C888	403 069 8404	CERAMIC 0.01U Z 50V	1
C889	403 039 1909	ELECT 3300U M 6.3V	1
C890	403 069 8404	CERAMIC 0.01U Z 50V	1
C891	403 069 1504	CERAMIC 1000P K 50V	1
C892	403 069 1504	CERAMIC 1000P K 50V	1
C893	403 074 2701	CERAMIC 0.047U Z 50V	1
C894	403 074 2701	CERAMIC 0.047U Z 50V	1
C896	403 044 0300	ELECT 47U M 16V	1
C897	403 026 5408	CERAMIC 47P K 50V	1
R801	401 009 6602	CARBON 3.3K JA 1/2W	1
R804	401 024 8001	CARBON 1M JA 1/6W	1
R805	401 024 7004	CARBON 1K JA 1/6W	1

P.C.BOARD PARTS LIST (Continued)

Ref. No.	Part No.	Description	Q'ty
R806	401 024 8001	CARBON 1M JA 1/6W	1
R807	401 026 6609	CARBON 390 JA 1/6W	1
R808	401 026 1000	CARBON 2.7K JA 1/6W	1
R809	401 024 7004	CARBON 1K JA 1/6W	1
R814	401 027 5502	CARBON 6.8K JA 1/6W	1
R815	401 026 1000	CARBON 2.7K JA 1/6W	1
R817	401 016 4806	CARBON 22K JA 1/4W	1
R818	401 027 5502	CARBON 6.8K JA 1/6W	1
R819	401 027 0309	CARBON 47K JA 1/6W	1
R820	401 024 7707	CARBON 100K JA 1/6W	1
R821	401 024 7400	CARBON 10K JA 1/6W	1
R822	401 024 7707	CARBON 100K JA 1/6W	1
R824	401 018 3807	CARBON 3.3K JA 1/4W	1
R825	401 027 0309	CARBON 47K JA 1/6W	1
R826	401 012 8105	CARBON 100K JA 1/4W	1
R827	401 025 8208	CARBON 22K JA 1/6W	1
R828	401 020 2003	CARBON 4.7K JA 1/4W	1
R829	401 014 4105	CARBON 1.5K JA 1/4W	1
R830	401 020 2904	CARBON 47K JA 1/4W	1
R831	401 025 4606	CARBON 18K JA 1/6W	1
R832	401 024 6700	CARBON 100 JA 1/6W	1
R833	401 024 7707	CARBON 100K JA 1/6W	1
R834	401 027 0309	CARBON 47K JA 1/6W	1
R835	401 012 4107	CARBON 100 JA 1/4W	1
R836	401 016 1102	CARBON 22 JA 1/4W	1
R837	401 024 7004	CARBON 1K JA 1/6W	1
R839	401 012 4503	CARBON 100 JA 1/4W	1
R840	401 026 9907	CARBON 4.7K JA 1/6W	1
R849	401 012 8105	CARBON 100K JA 1/4W	1
R850	401 016 1102	CARBON 22 JA 1/4W	1
R851	401 025 4903	CARBON 180K JA 1/6W	1
R852	401 025 4903	CARBON 180K JA 1/6W	1
R853	401 026 4308	CARBON 3.3K JA 1/6W	1
R854	401 026 4308	CARBON 3.3K JA 1/6W	1
R855	401 018 3807	CARBON 3.3K JA 1/4W	1
R856	401 026 4308	CARBON 3.3K JA 1/6W	1
R859	401 027 2600	CARBON 5.6K JA 1/6W	1
R860	401 027 2600	CARBON 5.6K JA 1/6W	1
R861	401 025 8703	CARBON 220K JA 1/6W	1
R862	401 025 8703	CARBON 220K JA 1/6W	1
R863	401 026 1000	CARBON 2.7K JA 1/6W	1
R864	401 025 7805	CARBON 2.2K JA 1/6W	1
R866	401 027 0309	CARBON 47K JA 1/6W	1
R867	401 024 7400	CARBON 10K JA 1/6W	1
R868	401 024 7707	CARBON 100K JA 1/6W	1
R869	401 027 0309	CARBON 47K JA 1/6W	1
R870	401 027 0309	CARBON 47K JA 1/6W	1
R872	401 026 4308	CARBON 3.3K JA 1/6W	1
R873	401 012 5708	CARBON 1K JA 1/4W	1
R874	401 018 3807	CARBON 3.3K JA 1/4W	1
R875	401 024 7400	CARBON 10K JA 1/6W	1
R876	401 016 3809	CARBON 2.2K JA 1/4W	1
R878	401 016 3809	CARBON 2.2K JA 1/4W	1
R883	401 012 5708	CARBON 1K JA 1/4W	1
R884	401 019 9600	CARBON 47 JA 1/4W	1
R886	401 017 1804	CARBON 2.7K JA 1/4W	1
R887	401 026 1000	CARBON 2.7K JA 1/6W	1
R888	401 021 1906	CARBON 560 JA 1/4W	1
R889	401 027 5205	CARBON 680 JA 1/6W	1
R890	401 026 9907	CARBON 4.7K JA 1/6W	1
R891	401 024 7400	CARBON 10K JA 1/6W	1
R892	401 024 7004	CARBON 1K JA 1/6W	1
R893	401 024 7400	CARBON 10K JA 1/6W	1
R894	401 021 3009	CARBON 5.6K JA 1/4W	1
R895	401 024 7004	CARBON 1K JA 1/6W	1
R896	401 026 6609	CARBON 390 JA 1/6W	1
R897	401 025 7805	CARBON 2.2K JA 1/6W	1
R898	401 027 5205	CARBON 680 JA 1/6W	1
R899	401 026 6609	CARBON 390 JA 1/6W	1
R900	401 016 1102	CARBON 22 JA 1/4W	1
R901	401 024 7707	CARBON 100K JA 1/6W	1
R902	401 027 0309	CARBON 47K JA 1/6W	1
R903	402 015 9205	FUSIBLE RES 47 J- 1/4W	1
R904	401 012 7009	CARBON 10K JA 1/4W	1
R905	401 024 7707	CARBON 100K JA 1/6W	1
R906	401 024 8001	CARBON 1M JA 1/6W	1
R907	401 024 7707	CARBON 100K JA 1/6W	1
R908	401 024 7400	CARBON 10K JA 1/6W	1
R909	401 024 7400	CARBON 10K JA 1/6W	1

Ref. No.	Part No.	Description	Q'ty
R910	401 024 7707	CARBON 100K JA 1/6W	1
R911	401 027 5502	CARBON 6.8K JA 1/6W	1
R912	401 025 8208	CARBON 22K JA 1/6W	1
R913	401 024 7707	CARBON 100K JA 1/6W	1
R914	401 027 9005	CARBON 82K JA 1/6W	1
R915	401 026 9600	CARBON 470 JA 1/6W	1
R916	401 025 8208	CARBON 22K JA 1/6W	1
R917	401 024 7400	CARBON 10K JA 1/6W	1
R918	401 024 7400	CARBON 10K JA 1/6W	1
R919	401 024 7400	CARBON 10K JA 1/6W	1
R920	401 012 7009	CARBON 10K JA 1/4W	1
R921	401 024 7400	CARBON 10K JA 1/6W	1
R922	401 024 7400	CARBON 10K JA 1/6W	1
R925	401 024 7400	CARBON 10K JA 1/6W	1
R926	401 012 7009	CARBON 10K JA 1/4W	1
R927	401 012 7009	CARBON 10K JA 1/4W	1
R928	401 012 7009	CARBON 10K JA 1/4W	1
R929	401 024 7400	CARBON 10K JA 1/6W	1
R930	401 027 5502	CARBON 6.8K JA 1/6W	1
R931	401 026 9907	CARBON 4.7K JA 1/6W	1
R932	401 012 4503	CARBON 100 JA 1/4W	1
R933	401 026 4308	CARBON 3.3K JA 1/6W	1
R934	401 024 7400	CARBON 10K JA 1/6W	1
R935	401 024 7400	CARBON 10K JA 1/6W	1
R936	401 024 7400	CARBON 10K JA 1/6W	1
R937	401 024 7400	CARBON 10K JA 1/6W	1
R938	401 024 7400	CARBON 10K JA 1/6W	1
R939	401 024 7400	CARBON 10K JA 1/6W	1
R940	401 024 7400	CARBON 10K JA 1/6W	1
R941	401 024 7400	CARBON 10K JA 1/6W	1
R942	401 024 7400	CARBON 10K JA 1/6W	1
R943	401 024 7400	CARBON 10K JA 1/6W	1
R944	401 024 7400	CARBON 10K JA 1/6W	1
R945	401 024 7400	CARBON 10K JA 1/6W	1
R946	401 026 9907	CARBON 4.7K JA 1/6W	1
R947	401 024 7707	CARBON 100K JA 1/6W	1
R948	401 026 9907	CARBON 4.7K JA 1/6W	1
R949	401 012 8105	CARBON 100K JA 1/4W	1
ASSY,PCB,MAIN TRANS-1			
57	620 196 5520	Assy,PCB,Main TRANS-1	1
	620 197 0753	Shield Cover	1
	620 031 4763	Wire Wrap Terminal	4
	620 191 2746	Rivet 3.5	1
	620 197 7134	Assy,CONNECTOR-S,9P	1
CA601	620 191 7055	Connector 1P Assy	1
CA602	620 191 7062	Connector 1P Assy	1
ASSY,PCB,SUB TRANS			
58	620 196 5537	Assy,PCB,SUB Trans	1
	620 017 2721	Fuse Clip	6
	620 031 4763	Wire Wrap Terminal	4
CA642	620 191 7031	Connector 1P Assy	1
CA643	620 191 7048	Connector 1P Assy	1
CA801	620 191 6997	Connector 6P Assy	1
CA957	620 191 7000	Connector 2P Assy	1
F751 ⚠	423 002 6106	FUSE 250V T 0.16A	1
F752 ⚠	423 003 4101	FUSE 250V T 0.4A	1
F753 ⚠	423 003 7201	FUSE 250V T 0.5A	1
D751	407 061 9209	DIODE W02	1
C751	403 069 8404	CERAMIC 0.01U Z 50V	1
C752	403 069 8404	CERAMIC 0.01U Z 50V	1
C753	403 069 8404	CERAMIC 0.01U Z 50V	1
C754	403 069 8404	CERAMIC 0.01U Z 50V	1
C755	403 049 5508	ELECT 10U M 50V	1
ASSY,PCB,BEAT CANCEL			
59	620 196 5544	Assy,PCB,Beat Cancel	1
	620 196 4172	Assy,CONNECTOR-S,2P	1
SW651	620 016 5600	Switch Slide 2-2	1
ASSY,PCB,MAIN TRANS-2			
60	620 196 6275	Assy,PCB,Main TRANS-2	1
CN621	620 191 6232	Plug 5P	1
DECK IND. P.C.B. ASSY			
61	620 190 7223	Deck IND. P.C.B. Assy	1
	620 030 8083	Lamp	1
	620 051 9724	Spacer LED	4

P.C.BOARD PARTS LIST (Continued)

Ref. No.	Part No.	Description	Q'ty
	620 051 9731	Spacer LED	5
	620 121 2549	Spacer Lamp	1
CA315	620 191 6867	Connector 9P Assy	1
CA316	620 191 6874	Connector 10P Assy	1
CA741	620 191 6584	Connector 7P Assy	1
S781	620 016 7819	Tact Switch 160G	1
or	620 195 9628	Switch,Tact	1
S782	620 016 7819	Tact Switch 160G	1
or	620 195 9628	Switch,Tact	1
S783	620 016 7819	Tact Switch 160G	1
or	620 195 9628	Switch,Tact	1
S784	620 016 7819	Tact Switch 160G	1
or	620 195 9628	Switch,Tact	1
S785	620 016 7819	Tact Switch 160G	1
or	620 195 9628	Switch,Tact	1
S786	620 016 7819	Tact Switch 160G	1
or	620 195 9628	Switch,Tact	1
S787	620 016 7819	Tact Switch 160G	1
or	620 195 9628	Switch,Tact	1
S788	620 016 7819	Tact Switch 160G	1
or	620 195 9628	Switch,Tact	1
S789	620 016 7819	Tact Switch 160G	1
or	620 195 9628	Switch,Tact	1
S790	620 016 7819	Tact Switch 160G	1
or	620 195 9628	Switch,Tact	1
Q781	405 018 2600	TR 2SC3400	1
Q782	405 018 2600	TR 2SC3400	1
Q783	405 018 2600	TR 2SC3400	1
Q784	405 018 2600	TR 2SC3400	1
Q785	405 004 4601	TR 2SA608-F-SPA-AC	1
or	405 004 5103	TR 2SA608-G-SPA-AC	1
Q786	405 004 4601	TR 2SA608-F-SPA-AC	1
or	405 004 5103	TR 2SA608-G-SPA-AC	1
Q787	405 004 4601	TR 2SA608-F-SPA-AC	1
or	405 004 5103	TR 2SA608-G-SPA-AC	1
Q788	405 004 4601	TR 2SA608-F-SPA-AC	1
or	405 004 5103	TR 2SA608-G-SPA-AC	1
Q789	405 004 4601	TR 2SA608-F-SPA	1
or	405 004 5103	TR 2SA608-G-SPA	1
Q790	405 018 2600	TR 2SC3400	1
D771	407 109 1202	LED SLB-25VR3F	1
D772	407 109 1202	LED SLB-25VR3F	1
D773	407 109 1202	LED SLB-25VR3F	1
D774	407 109 1202	LED SLB-25VR3F	1
D775	407 008 0405	DIODE GMB01-BT	1
D776	407 008 0405	DIODE GMB01-BT	1
D777	407 112 7208	LED SLB-55MG3F	1
D778	407 112 7109	LED SLB-55VR3F	1
D779	407 112 7208	LED SLB-55MG3F	1
D780	407 112 7208	LED SLB-55MG3F	1
D781	407 112 7208	LED SLB-55MG3F	1
D782	407 008 0405	DIODE GMB01-BT	1
D783	407 008 0405	DIODE GMB01-BT	1
D784	407 005 3805	DIODE DS442-BT	1
D785	407 008 0405	DIODE GMB01-BT	1
D786	407 008 0405	DIODE GMB01-BT	1
D787	407 008 0405	DIODE GMB01-BT	1
D788	407 008 0405	DIODE GMB01-BT	1
D789	407 008 0405	DIODE GMB01-BT	1
D790	407 008 0405	DIODE GMB01-BT	1
D791	407 008 0405	DIODE GMB01-BT	1
R781	402 015 6402	FUSIBLE RES 2.2 J- 1/4W	1
R782	401 026 0607	CARBON 270 JA 1/6W	1
R783	401 026 0607	CARBON 270 JA 1/6W	1
R784	401 026 0607	CARBON 270 JA 1/6W	1
R785	401 026 0607	CARBON 270 JA 1/6W	1
R786	401 024 7400	CARBON 10K JA 1/6W	1
R787	401 024 7400	CARBON 10K JA 1/6W	1
R788	401 024 7400	CARBON 10K JA 1/6W	1
R789	401 024 7400	CARBON 10K JA 1/6W	1
R790	401 024 7400	CARBON 10K JA 1/6W	1
R791	401 025 7409	CARBON 220 JA 1/6W	1
R792	401 026 0607	CARBON 270 JA 1/6W	1
R793	401 025 7409	CARBON 220 JA 1/6W	1
R794	401 025 7409	CARBON 220 JA 1/6W	1
R795	401 025 7409	CARBON 220 JA 1/6W	1

Ref. No.	Part No.	Description	Q'ty
VOLUME P.C.B. ASSY			
62	620 190 7230	Volume P.C.B. Assy	1
CA951	620 191 6980	Connector 3P Assy	1
CN501	620 021 8337	Plug 6P	1
CN502	620 021 7620	Plug 2P	1
CN503	620 021 5923	Plug 3P	1
VR501	620 190 9647	Motor VR 2X20KA	1
IC501	409 114 4803	IC LB1641	1
D501	407 050 5502	ZENER DIODE GZA5.6Y	1
C501	403 067 5603	MT-COMPO 0.1U J 50V	1
C502	403 057 0908	POLYESTER 0.01U K 50V	1
C503	403 058 1607	POLYESTER 1500P K 50V	1
C504	403 058 1607	POLYESTER 1500P K 50V	1
C505	403 067 7904	MT-COMPO 0.056U J 50V	1
C506	403 067 7904	MT-COMPO 0.056U J 50V	1
R641	402 016 4506	FUSIBLE RES 10 J- 1/2W	1
R642	401 026 7002	CARBON 3.9K JA 1/6W	1
R643	401 026 7002	CARBON 3.9K JA 1/6W	1
DOLBY SWITCH P.C.B. ASSY			
63	620 190 7247	Dolby Switch P.C.B. Assy	1
CA312	620 191 6836	Connector 6P Assy	1
CN741	620 022 0231	Plug 7P	1
S741	620 190 9845	Rotary Switch 2-3	1
S742	620 190 9852	Rotary Switch 2-2	1
VR741	620 190 9586	VR 2X50KA	1
D741	407 008 0405	DIODE GMB01-BT	1
D742	407 008 0405	DIODE GMB01-BT	1
D743	407 008 0405	DIODE GMB01-BT	1
HEADPHONE P.C.B. ASSY			
64	620 190 7254	Headphone P.C.B. Assy	1
	620 190 2242	Jack 7P Black	1
CA958	620 020 8840	Connector 5P Assy	1
R781	401 060 3008	OXIDE-MT 220 JA 1W	1
R782	401 060 3008	OXIDE-MT 220 JA 1W	1
R783	401 055 5307	OXIDE-MT 220 JA 1/2W	1
R784	401 055 5307	OXIDE-MT 220 JA 1/2W	1
T1 SWITCH P.C.B. ASSY			
65	620 190 7261	T1 Switch P.C.B. Assy	1
CA317	620 191 6881	Connector 3P Assy	1
S751	620 016 7819	Tact Switch 160G	1
or	620 195 9628	Switch,Tact	1
S752	620 016 7819	Tact Switch 160G	1
or	620 195 9628	Switch,Tact	1
D751	407 008 0405	DIODE GMB01-BT	1
D752	407 008 0405	DIODE GMB01-BT	1
T2 SWITCH P.C.B. ASSY			
66	620 190 7278	T2 Switch P.C.B. Assy	1
CA318	620 191 6898	Connector 4P Assy	1
S761	620 016 7819	Tact Switch 160G	1
or	620 195 9628	Switch,Tact	1
S762	620 016 7819	Tact Switch 160G	1
or	620 195 9628	Switch,Tact	1
S763	620 016 7819	Tact Switch 160G	1
or	620 195 9628	Switch,Tact	1
S764	620 016 7819	Tact Switch 160G	1
or	620 195 9628	Switch,Tact	1
D761	407 008 0405	DIODE GMB01-BT	1
D762	407 008 0405	DIODE GMB01-BT	1
D763	407 008 0405	DIODE GMB01-BT	1
D764	407 008 0405	DIODE GMB01-BT	1
VR IND P.C.B. ASSY			
67	620 190 7285	VR IND P.C.B. Assy	1
CA502	620 018 1952	Connector 2P Assy	1
D721	407 113 4503	LED SLP-646B-50	1
PCB CD-CONTROL ASSY			
68	620 190 8008	PCB CD-Control Assy	1
	620 182 6654	Digitron 12-BT-24GK	1
	620 191 9356	Cushion	1
CN1	620 022 1924	Plug 8P	1
CN2	620 022 1931	Plug 9P	1
CN3	620 022 1931	Plug 9P	1
CN4	620 022 1924	Plug 8P	1
S101	620 016 7819	Tact Switch 160G	1

P.C.BOARD PARTS LIST (Continued)

Ref. No.	Part No.	Description	Q'ty
or	620 195 9628	Switch,Tact	1
S102	620 016 7819	Tact Switch 160G	1
or	620 195 9628	Switch,Tact	1
S103	620 016 7819	Tact Switch 160G	1
or	620 195 9628	Switch,Tact	1
S104	620 016 7819	Tact Switch 160G	1
or	620 195 9628	Switch,Tact	1
S105	620 016 7819	Tact Switch 160G	1
or	620 195 9628	Switch,Tact	1
S106	620 016 7819	Tact Switch 160G	1
or	620 195 9628	Switch,Tact	1
S107	620 016 7819	Tact Switch 160G	1
or	620 195 9628	Switch,Tact	1
S108	620 016 7819	Tact Switch 160G	1
or	620 195 9628	Switch,Tact	1
S109	620 016 7819	Tact Switch 160G	1
or	620 195 9628	Switch,Tact	1
S110	620 016 7819	Tact Switch 160G	1
or	620 195 9628	Switch,Tact	1
S111	620 016 7819	Tact Switch 160G	1
or	620 195 9628	Switch,Tact	1
S112	620 016 7819	Tact Switch 160G	1
or	620 195 9628	Switch,Tact	1
S113	620 016 7819	Tact Switch 160G	1
or	620 195 9628	Switch,Tact	1
S114	620 016 7819	Tact Switch 160G	1
or	620 195 9628	Switch,Tact	1
S115	620 016 7819	Tact Switch 160G	1
or	620 195 9628	Switch,Tact	1
S116	620 016 7819	Tact Switch 160G	1
or	620 195 9628	Switch,Tact	1
S117	620 016 7819	Tact Switch 160G	1
or	620 195 9628	Switch,Tact	1
S118	620 016 7819	Tact Switch 160G	1
or	620 195 9628	Switch,Tact	1
S119	620 016 7819	Tact Switch 160G	1
or	620 195 9628	Switch,Tact	1
S120	620 016 7819	Tact Switch 160G	1
or	620 195 9628	Switch,Tact	1
S121	620 016 7819	Tact Switch 160G	1
or	620 195 9628	Switch,Tact	1
S122	620 016 7819	Tact Switch 160G	1
or	620 195 9628	Switch,Tact	1
S123	620 016 7819	Tact Switch 160G	1
or	620 195 9628	Switch,Tact	1
S124	620 016 7819	Tact Switch 160G	1
or	620 195 9628	Switch,Tact	1
S125	620 016 7819	Tact Switch 160G	1
or	620 195 9628	Switch,Tact	1
S126	620 016 7819	Tact Switch 160G	1
or	620 195 9628	Switch,Tact	1
S127	620 016 7819	Tact Switch 160G	1
or	620 195 9628	Switch,Tact	1
S128	620 016 7819	Tact Switch 160G	1
or	620 195 9628	Switch,Tact	1
Q1	405 078 5504	TR DTA124T-S	1
D1	407 007 9904	DIODE GMA01-BT	1
D2	407 007 9904	DIODE GMA01-BT	1
D3	407 007 9904	DIODE GMA01-BT	1
D4	407 007 9904	DIODE GMA01-BT	1
D5	407 007 9904	DIODE GMA01-BT	1
D6	407 007 9904	DIODE GMA01-BT	1
D7	407 007 9904	DIODE GMA01-BT	1
D8	407 007 9904	DIODE GMA01-BT	1
R1	401 025 8208	CARBON 22K JA 1/6W	1
R2	401 025 8208	CARBON 22K JA 1/6W	1
R3	401 025 8208	CARBON 22K JA 1/6W	1
R4	401 025 8208	CARBON 22K JA 1/6W	1
R5	401 025 8208	CARBON 22K JA 1/6W	1
R6	401 025 8208	CARBON 22K JA 1/6W	1
R7	401 025 8208	CARBON 22K JA 1/6W	1
R8	401 025 8208	CARBON 22K JA 1/6W	1
R9	401 025 8208	CARBON 22K JA 1/6W	1
R10	401 025 8208	CARBON 22K JA 1/6W	1
R11	401 025 8208	CARBON 22K JA 1/6W	1
R12	401 025 8208	CARBON 22K JA 1/6W	1

Ref. No.	Part No.	Description	Q'ty
PL.POWER P.C.B. ASSY			
69	620 191 1329	PL.Power P.C.B. Assy	1
	411 020 8004	SCR S-TPG BRZ 3X8	1
	620 053 8084	Plate Heat Sink	1
Q997	405 035 7107	TR 2SD1913-R	1
or	405 035 7206	TR 2SD1913-S	1
D997	407 049 6305	ZENER DIODE GZA12Y-BT	1
C997	403 049 5508	ELECT 10U M 50V	1
C998	403 043 4903	ELECT 33U M 16V	1
C999	403 042 3600	ELECT 100U M 16V	1
R995	401 061 0105	OXIDE-MT 3.3 JB 1W	1
R996	401 014 4105	CARBON 1.5K JA 1/4W	1

NOTES:

1. Parts order must contain Model Number, Part Number and Description.
2. Ordering quantity of screws and resistors must be multiple of 10 pcs.

PRODUCT SAFETY NOTICE

Each precaution in this manual should be followed during servicing. Components identified with the IEC symbol ⚠ in the parts list and the schematic diagram designate components in which safety can be of special significance. When replacing a component identified with ⚠, use only the replacement parts designated, or parts with the same ratings of resistance, wattage or voltage that are designated in the parts list in this manual. Leakage-current or resistance measurements must be made to determine that exposed parts are acceptably insulated from the supply circuit before returning the product to the customer.

T2 SWITCH P.C.BOARD
(BOTTOM VIEW)

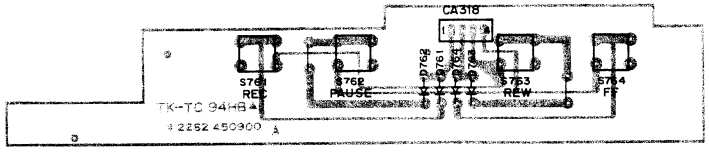

DOLBY SWITCH P.C.BOARD
(BOTTOM VIEW)

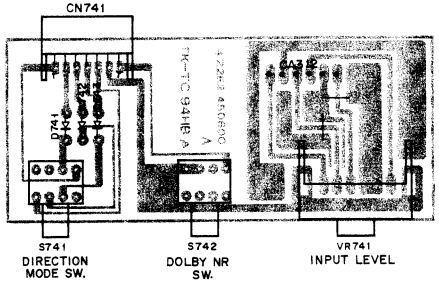

DECK IND. P.C.BOARD
(BOTTOM VIEW)

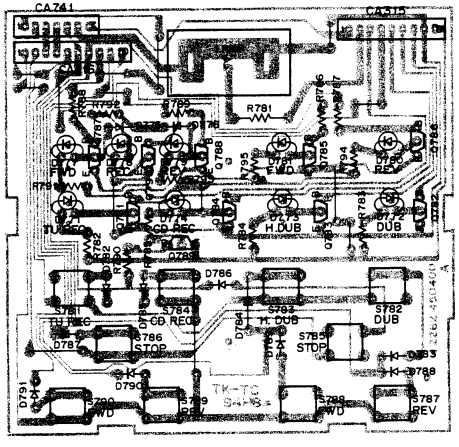

TRANSISTOR DC VOLTAGES														
Ref. No.	DEVICE	B	C	E	Ref. No.	DEVICE	B	C	E	Ref. No.	DEVICE	B	C	E
Q781	2SC3400	0V	0V	0V	Q785	2SA608	5.5V	0.1V	5.6V	Q789	2SA608	5.5V	0.1V	5.6V
Q782	2SC3400	0V	0V	0V	Q786	2SA608	5.5V	0.1V	5.6V	Q790	2SC3400	0V	0.6V	0V
Q783	2SC3400	0V	4.3V	0V	Q787	2SA608	5.5V	0.2V	5.6V					
Q784	2SC3400	0V	0V	0V	Q788	2SA608	5.5V	0.2V	5.6V					

TUNER PRINTED CIRCUIT BOARD
(BOTTOM VIEW)

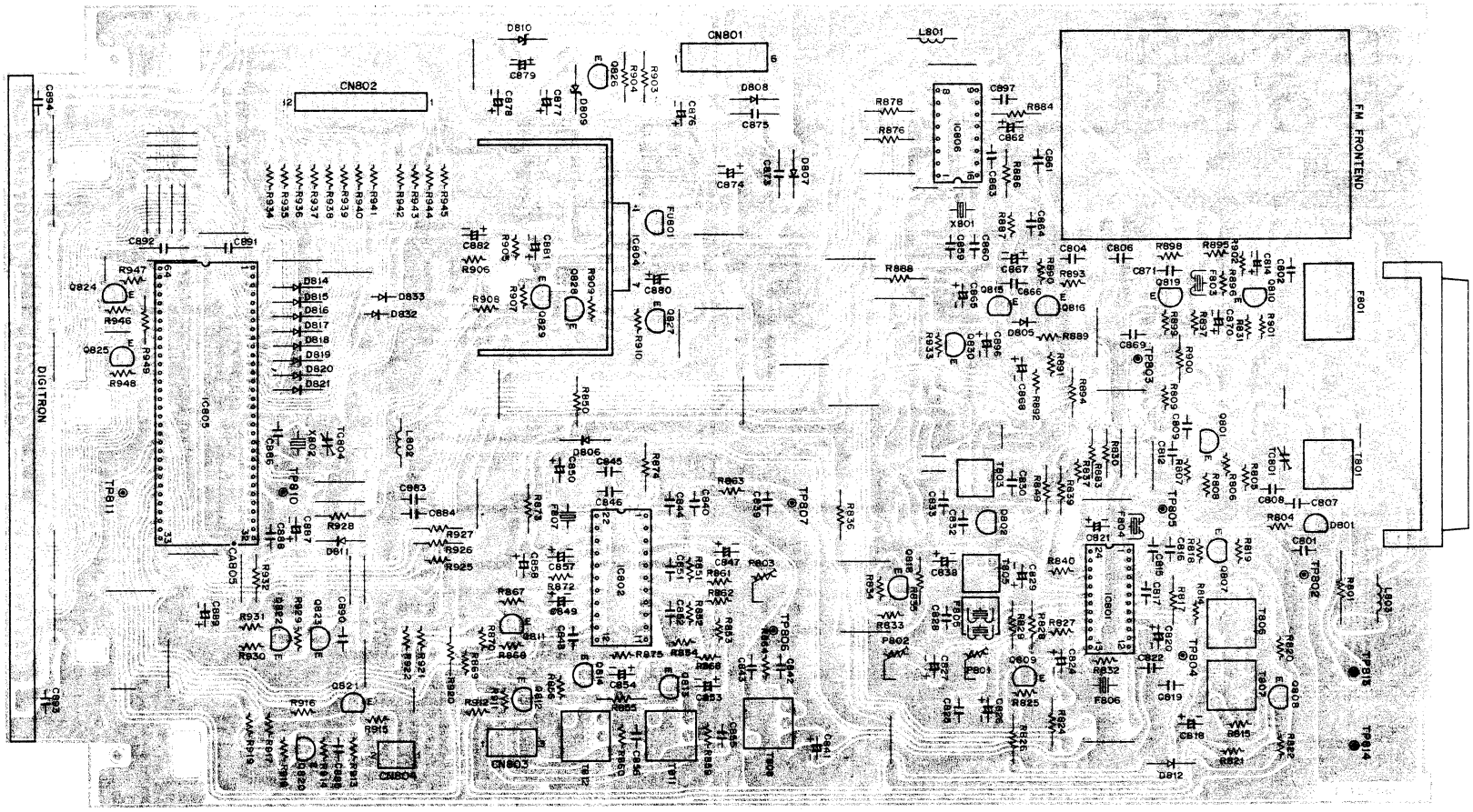

IC PIN NUMBERS DC VOLTAGES

Ref. No.	DEVICE	1	2	3	4	5	6	7	8	9	10	11	12	13	14	15	16	17	18	19	20
IC801	LA1266	2.4V	2.3V	2.3V	0V	12.3V	12.3V	12.3V	5.0V	3.4V	2.3V	5.5V	3.1V	0V	1.5V	1.5V	0V	0V	2.4V	1.5V	0V
		21	**22**	**23**	**24**	**25**	**26**	**27**	**28**	**29**	**30**	**31**	**32**	**33**	**34**	**35**	**36**	**37**	**38**	**39**	**40**
		3.8V	3.8V	3.8V	2.5V	–	–	–	–	–	–	–	–	–	–	–	–	–	–	–	–
IC802	LA3400	3.2V	3.2V	3.2V	3.2V	5.7V	3.2V	3.2V	5.7V	3.2V	0V	0V	0V	5.2V	4.9V	0V	1.7V	3.1V	2.8V	2.9V	2.9V
		21	**22**	**23**	**24**	**25**	**26**	**27**	**28**	**29**	**30**	**31**	**32**	**33**	**34**	**35**	**36**	**37**	**38**	**39**	**40**
		3.5V	12.6V	–	–	–	–	–	–	–	–	–	–	–	–	–	–	–	–	–	–
IC804	LA5667	22.9V	0V	4.9V	22.8V	5.5V	0.1V	13.1V	–	–	–	–	–	–	–	–	–	–	–	–	–
IC805	TMP47C870N	−26.8V	−26.6V	−21.5V	−21.5V	−21.5V	−23.7V	−23.7V	−21.3V	−20.7V	−23.7V	−21.3V	−16.5V	−26.2V	0V	1.6V	1.6V	1.6V	0V	2.3V	2.2V
		21	**22**	**23**	**24**	**25**	**26**	**27**	**28**	**29**	**30**	**31**	**32**	**33**	**34**	**35**	**36**	**37**	**38**	**39**	**40**
		4.6V	4.9V	5.5V	0V	0V	0V	0V	0V	0V	0.6V	0.6V	0V	5.5V	0V	0V	3.6V	2.1V	0V	0V	0V
		41	**42**	**43**	**44**	**45**	**46**	**47**	**48**	**49**	**50**	**51**	**52**	**53**	**54**	**55**	**56**	**57**	**58**	**59**	**60**
		5.5V	0V	5.5V	0V	0V	0V	0V	−24.2V	−24.2V	−24.2V	−24.3V	−24.3V	−24.3V	−24.3V	−24.2V	−24.3V	−24.3V	−24.2V	−24.3V	−26.3V
		61	**62**	**63**	**64**	**65**	**66**	**67**	**68**	**69**	**70**	**71**	**72**	**73**	**74**	**75**	**76**	**77**	**78**	**79**	**80**
		−26.5V	−26.5V	−26.3V	4.7V	–	–	–	–	–	–	–	–	–	–	–	–	–	–	–	–
IC806	LM7001	1.5V	1.5V	0V	0V	0V	0V	2.6V	2.3V	13.0V	0V	2.7V	5.4V	5.4V	0.7V	2.3V	0V	–	–	–	–

TRANSISTOR DC VOLTAGES

Ref. No.	DEVICE	B	C	E	Ref. No.	DEVICE	B	C	E	Ref. No.	DEVICE	B	C	E
Q807	2SA608	3.3V	3.8V	3.9V	Q818	2SA608	12.5V	0V	12.3V	Q826	2SB560	−27.3V	−55.3V	−26.8V
Q808	2SC536	0.6V	0V	0V	Q819	2SC2839	1.9V	12.2V	1.2V	Q827	2SB808	13.0V	0V	13.1V
Q809	2SA608	1.5V	1.5V	1.5V	Q820	2SC536	0V	5.5V	0V	Q828	2SC3400	0V	13.0V	0V
Q811	2SC536	0.6V	0V	0V	Q821	2SC536	0V	5.5V	0V	Q829	2SB808	5.5V	0V	5.5V
Q812	2SA608	5.1V	−0.2V	5.5V	Q822	2SA608	4.7V	−0.6V	2.7V	Q830	2SC536	12.7V	13.0V	12.1V
Q813	2SD1012	−2.7V	0V	0V	Q823	2SC536	−0.4V	4.6V	0V			D	G	S
Q814	2SD1012	−2.7V	0V	0V	Q824	2SC3330	−24.3V	4.7V	−24.4V	Q801	2SK246	10.6V	4.7V	4.7V
Q816	2SC3069	0.5V	1.5V	0V	Q825	2SC3330	−24.3V	4.7V	−24.4V	Q815	2SK246	5.1V	0.7V	1.1V

FRONT CONTROL P.C.BOARD
(BOTTOM VIEW)

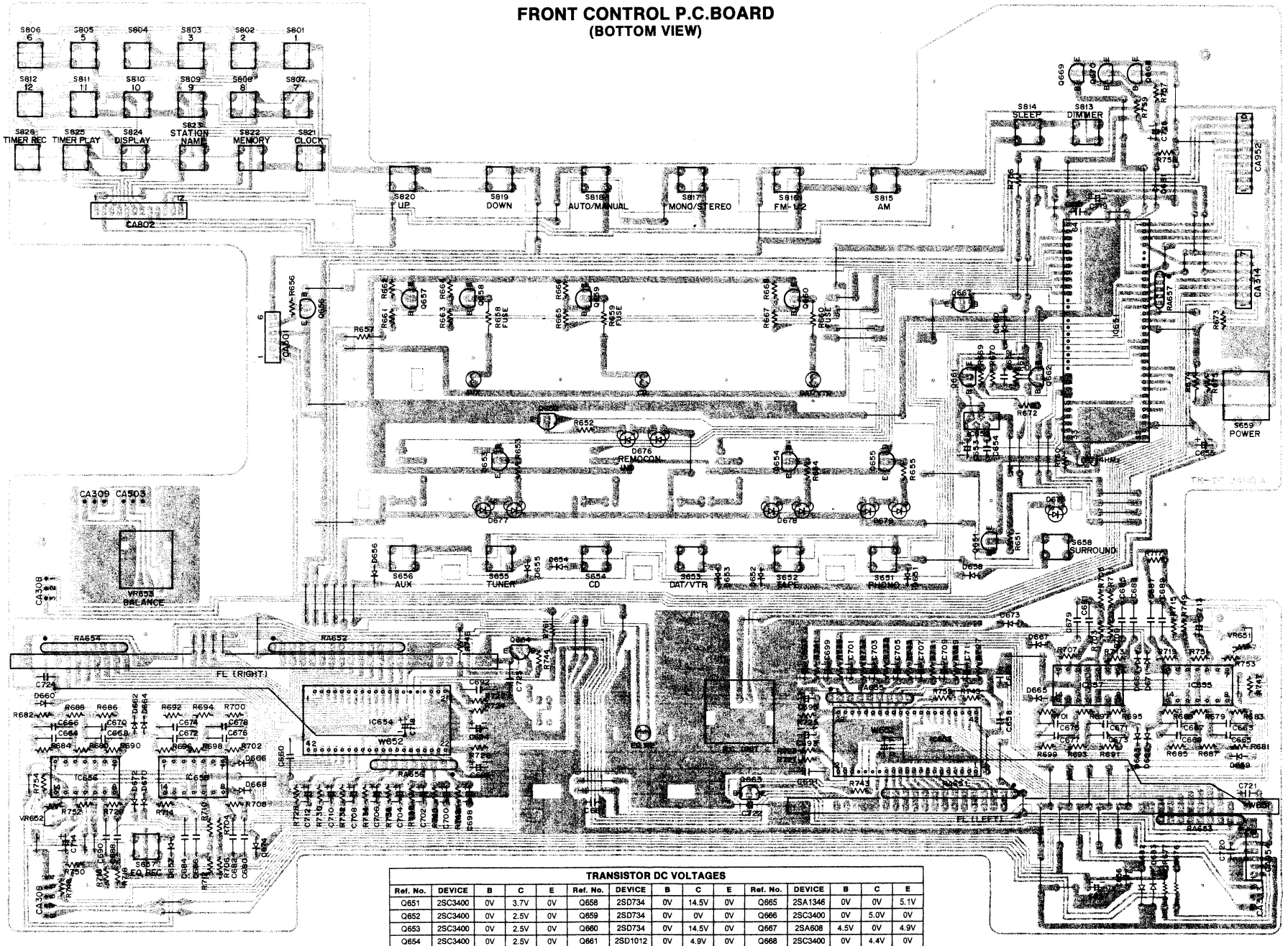

TRANSISTOR DC VOLTAGES

Ref. No.	DEVICE	B	C	E	Ref. No.	DEVICE	B	C	E	Ref. No.	DEVICE	B	C	E
Q651	2SC3400	0V	3.7V	0V	Q658	2SD734	0V	14.5V	0V	Q665	2SA1346	0V	0V	5.1V
Q652	2SC3400	0V	2.5V	0V	Q659	2SD734	0V	0V	0V	Q666	2SC3400	0V	5.0V	0V
Q653	2SC3400	0V	2.5V	0V	Q660	2SD734	0V	14.5V	0V	Q667	2SA608	4.5V	0V	4.9V
Q654	2SC3400	0V	2.5V	0V	Q661	2SD1012	0V	4.9V	0V	Q668	2SC3400	0V	4.4V	0V
Q655	2SC3400	0V	2.5V	0V	Q662	2SD1012	0V	4.9V	0V	Q669	2SC3400	0.6V	0V	0V
Q656	2SC3400	4.9V	0V	0V	Q663	2SC536	−21.8V	5.0V	−21.9V	Q670	2SC536	0.6V	0V	0V
Q657	2SD734	0V	14.5V	0V	Q664	2SC536	−21.8V	5.1V	−21.9V					

GRAPHIC EQUALIZER P.C.BOARD
(BOTTOM VIEW)

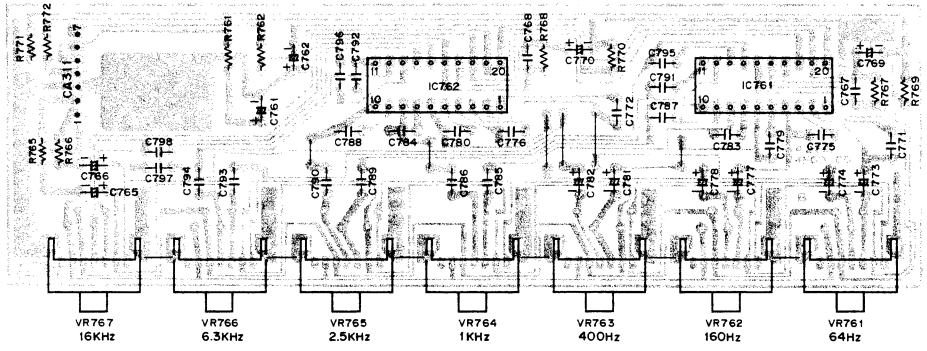

Graphic Equalizer P.C.Board Voltage Table

IC PIN NUMBERS DC VOLTAGES																				
Ref. No.	DEVICE	1	2	3	4	5	6	7	8	9	10	11	12	13	14	15	16	17	18	19	20
IC761,762	AN7337	0V	0V	0V	0V	0V	0V	0V	0V	0V	0V	0V	0V	0V	0V	0V	0V	0V	10.5V	0V	−10.5V
IC763	LA6458D	0V	0V	0V	−10.5V	0V	0V	0V	10.5V	−	−	−	−	−	−	−	−	−	−	−	

MAIN POWER P.C.BOARD
(BOTTOM VIEW)

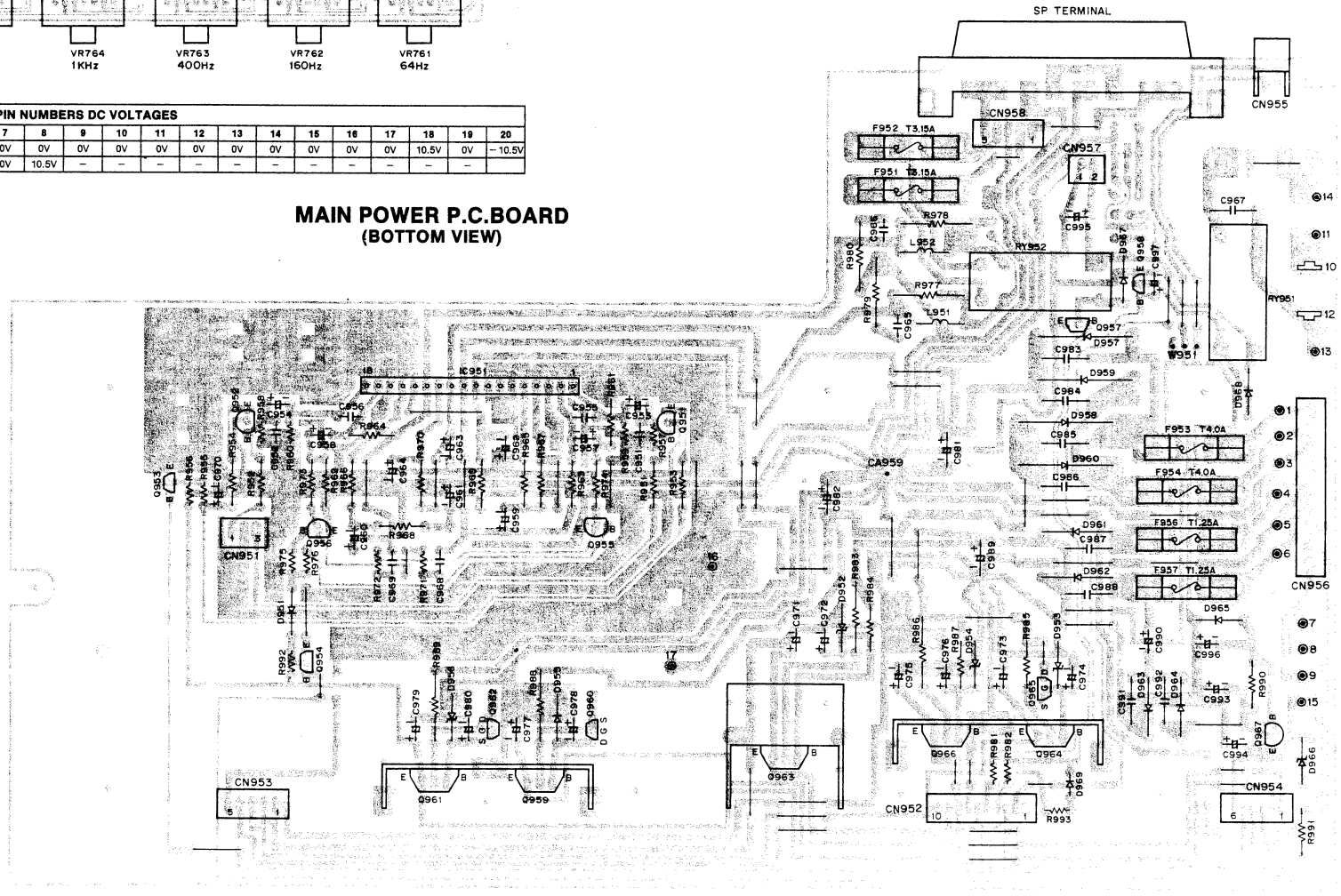

(Main Power P.C.Board Voltage Table)

IC PIN NUMBERS DC VOLTAGES																		
Ref. No.	DEVICE	1	2	3	4	5	6	7	8	9	10	11	12	13	14	15	16	17	18
IC951	STK4152	−0.1V	−0.1V	0V	−32.9V	−1.2V	0V	0V	0V	−35.0V	0V	35.1V	33.2V	0V	−35.0V	−1.3V	0V	−0.1V	−0.1V

TRANSISTOR DC VOLTAGES														
Ref. No.	DEVICE	B	C	E	Ref. No.	DEVICE	B	C	E	Ref. No.	DEVICE	B	C	E
Q951	2SC3792	0V	0V	0V	Q957	2SD1012	0.6V	0V	0V	Q966	2SD1913	5.6V	0V	5.1V
Q952	2SC3792	0V	0V	0V	Q958	2SD1012	0.6V	0V	0V	Q967	2SB764	−25.3V	−31.6V	−24.6V
Q953	2SC3400	4.9V	0V	0V	Q959	2SB1274	−17.8V	−32.9V	0V			D	G	S
Q954	2SC3400	0V	9.8V	0V	Q961	2SD1913	17.8V	0V	17.1V	Q960	2SK772	−17.8V	−32.4V	−32.8V
Q955	2SC536	0.6V	0.5V	0V	Q963	2SD1913	12.2V	24.5V	11.6V	Q962	2SK772	32.8V	17.8V	17.8V
Q956	2SC536	0.6V	0V	0V	Q964	2SD1913	15.1V	24.0V	14.5V	Q965	2SK772	0V	15.1V	15.1V

DECK FUNCTION P.C.BOARD
(BOTTOM VIEW)

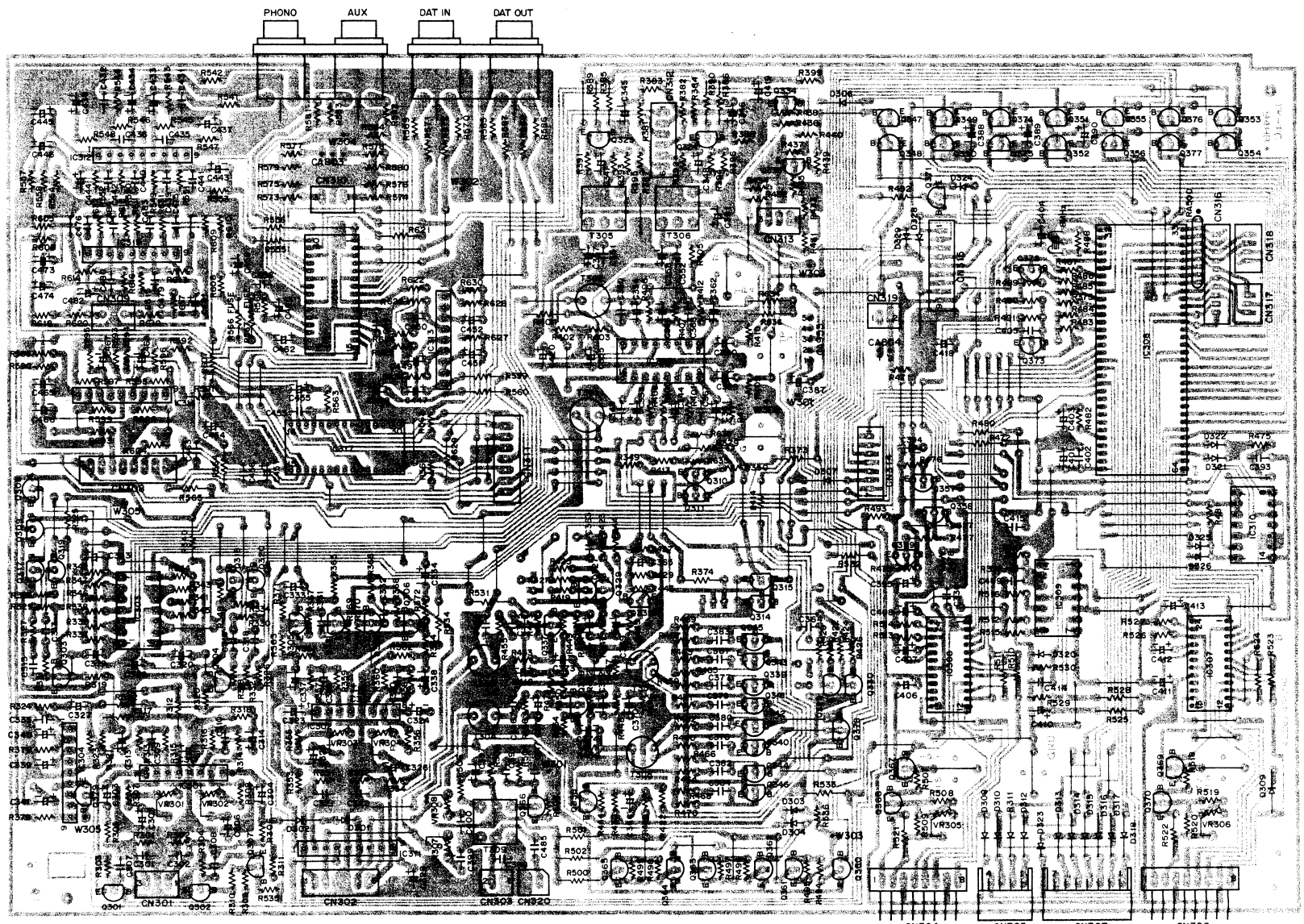

CD MAIN P.C.BOARD
(BOTTOM VIEW)

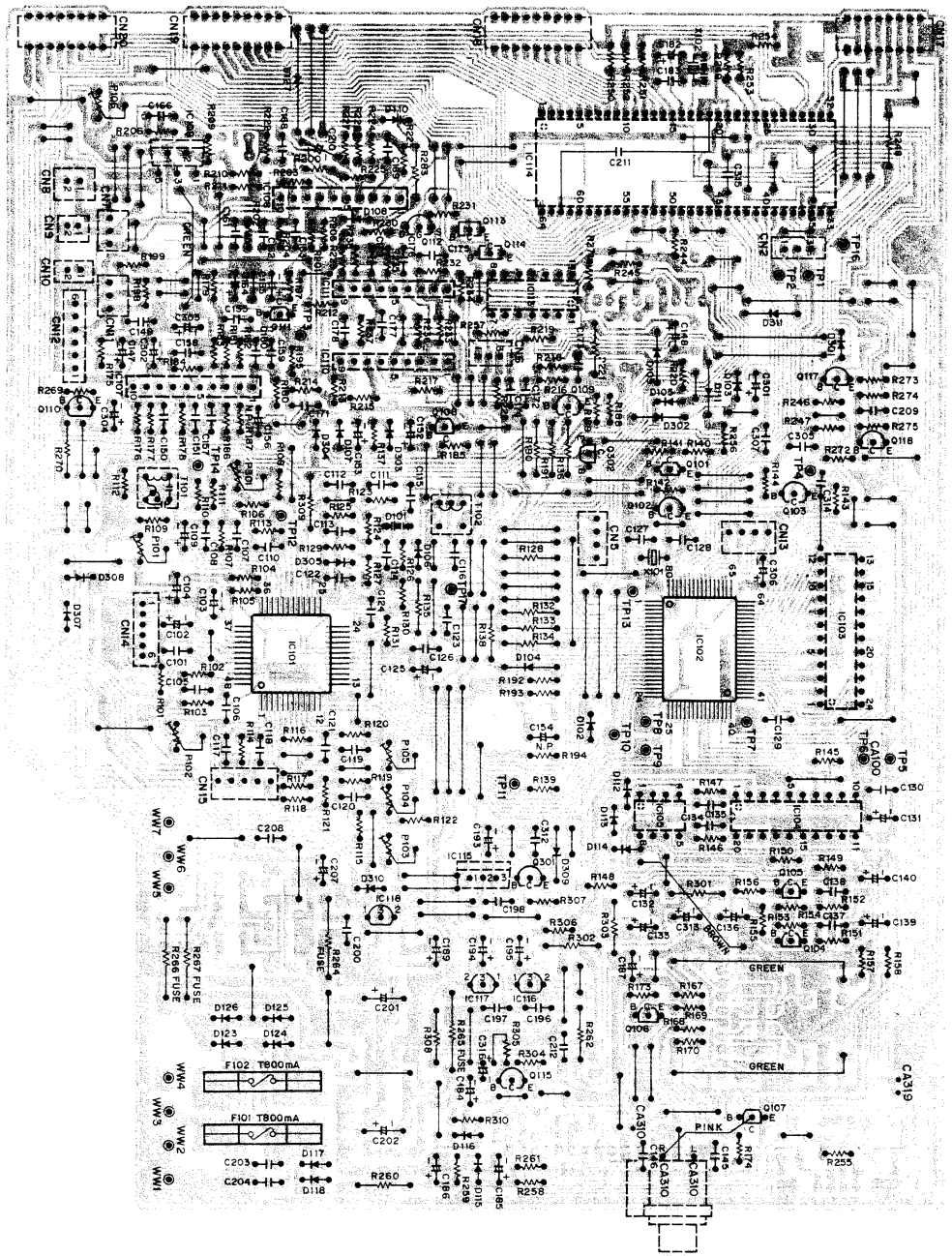

CD CONTROL P.C.BOARD
(BOTTOM VIEW)

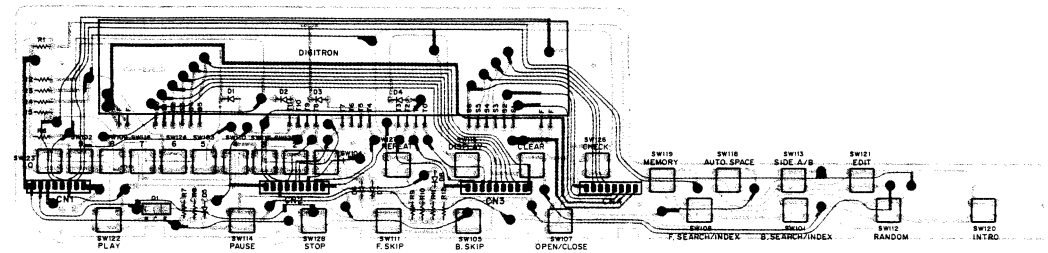

Voltage Table of CD Main P.C.Board

IC PIN NUMBERS DC VOLTAGES																					
Ref. No.	DEVICE	1	2	3	4	5	6	7	8	9	10	11	12	13	14	15	16	17	18	19	20
IC101	LA9200NM	0V	0V	0V	0V	0V	0V	0V	0V	0.4V	0V	0V	0V	0V	4.9V	0.4V	0.4V	4.2V	0.4V	0.4V	2.9V
		21	22	23	24	25	26	27	28	29	30	31	32	33	34	35	36	37	38	39	40
		0.4V	2.6V	2.2V	2.3V	0V	2.3V	0V	2.4V	2.4V	0V	0.4V	0.4V	0.4V	0V	0.4V	0.4V	0.4V	3.1V	0.4V	4.8V
		41	42	43	44	45	46	47	48	49	50	51	52	53	54	55	56	57	58	59	60
		0V	0V	−5.0V	0.4V	0.4V	0V	0.4V	0V	–	–	–	–	–	–	–	–	–	–	–	–

IC PIN NUMBERS DC VOLTAGES																					
Ref. No.	DEVICE	1	2	3	4	5	6	7	8	9	10	11	12	13	14	15	16	17	18	19	20
IC102	LC7860N	0V	4.4V	0.5V	2.4V	0V	0.5V	0.5V	0.5V	0.5V	0.4V	0.5V	0.4V	0V	0.5V	0.5V	0.5V	0.5V	0V	0.5V	0.5V
		21	22	23	24	25	26	27	28	29	30	31	32	33	34	35	36	37	38	39	40
		0.5V	0.4V	0V	0V	0V	0V	0.4V	0.4V	0.3V	4.9V	0.5V	5.0V	0.5V	0.4V	0V	0V	0V	0V	4.9V	4.9V
		41	42	43	44	45	46	47	48	49	50	51	52	53	54	55	56	57	58	59	60
		4.9V	0.8V	5.0V	0V	4.9V	0V	0V	0V	5.0V	4.9V	4.9V	5.0V	4.9V	4.9V	0.5V	0V	0V	0V	0V	4.9V
		61	62	63	64	65	66	67	68	69	70	71	72	73	74	75	76	77	78	79	80
		0V	3.3V	0.3V	0.3V	5.0V	0V	5.0V	1.0V	0V	0V	0V	4.9V	5.0V	0V	4.9V	0V	0V	0V	0.V	5.0V

IC PIN NUMBERS DC VOLTAGES																					
Ref. No.	DEVICE	1	2	3	4	5	6	7	8	9	10	11	12	13	14	15	16	17	18	19	20
IC103	LC3517AS	0V	0V	0V	0V	0V	5.0V	0V	0V	0V	0V	0V	0V	5.0V	5.0V	5.0V	0V	5.0V	0V	5.0V	5.0V
		21	22	23	24	25	26	27	28	29	30	31	32	33	34	35	36	37	38	39	40
		5.0V	0V	5.0V	5.0V	–	–	–	–	–	–	–	–	–	–	–	–	–	–	–	–

IC PIN NUMBERS DC VOLTAGES																					
Ref. No.	DEVICE	1	2	3	4	5	6	7	8	9	10	11	12	13	14	15	16	17	18	19	20
IC104	LC7880	2.4V	4.7V	0.4V	4.7V	0V	0V	0V	0V	0V	4.7V	0.5V	0V	0V	0V	0V	0V	0V	0.6V	0.7V	2.4V
IC105	LA6462D	2.4V	2.4V	2.4V	−6.8V	2.4V	2.4V	2.4V	6.6V	–	–	–	–	–	–	–	–	–	–	–	–
IC107	LA6510	0V	0V	0V	0V	−15.5V	0V	0V	0V	0V	14.8V	–	–	–	–	–	–	–	–	–	–
IC108	LA6510	0V	0V	0V	0V	−15.8V	0V	0V	0V	0V	14.7V	–	–	–	–	–	–	–	–	–	–
IC109	LA6500	0V	0V	−15.4V	0V	14.5V	–	–	–	–	–	–	–	–	–	–	–	–	–	–	–
IC110	μPC4570	6.8V	4.6V	4.6V	4.6V	−7.0V	0V	0V	0V	6.8V	–	–	–	–	–	–	–	–	–	–	–
IC111	μPC4570	6.8V	−5.6V	1.3V	0.4V	−7.0V	0V	0V	0V	6.8V	–	–	–	–	–	–	–	–	–	–	–
IC112	LA6393S	5.0V	−5.0V	−5.6V	0V	−5.0V	−5.6V	0V	−5.0V	5.0V	–	–	–	–	–	–	–	–	–	–	–
IC113	NJU74HCU	4.8V	0V	0V	5.0V	5.0V	0V	0V	4.4V	0.6V	0.6V	4.4V	4.4V	0.8V	5.0V	–	–	–	–	–	–
IC115	NJM7805A	5.0V	0V	13.5V	–	–	–	–	–	–	–	–	–	–	–	–	–	–	–	–	–
IC116	TA79L005	−5.0V	0V	−15.4V	–	–	–	–	–	–	–	–	–	–	–	–	–	–	–	–	–
IC117	AN79L07	0V	−7.0V	−15.4V	–	–	–	–	–	–	–	–	–	–	–	–	–	–	–	–	–
IC118	TA78L007	13.5V	6.8V	0V	–	–	–	–	–	–	–	–	–	–	–	–	–	–	–	–	–

IC PIN NUMBERS DC VOLTAGES																					
Ref. No.	DEVICE	1	2	3	4	5	6	7	8	9	10	11	12	13	14	15	16	17	18	19	20
IC114	LC6538D	−7.2V	−17.4V	−24.4V	−24.4V	−23.9V	−23.9V	−24.4V	−24.5V	−24.5V	−24.5V	−24.4V	−24.5V	−24.4V	−24.5V	5.0V	1.9V	2.1V	0V	0V	5.0V
		21	22	23	24	25	26	27	28	29	30	31	32	33	34	35	36	37	38	39	40
		0V	4.3V	0V	3.2V	0V	0V	0V	0V	0V	0.3V	0V	0V	0V	0V	0.3V	5.0V	0V	5.0V	5.0V	0V
		41	42	43	44	45	46	47	48	49	50	51	52	53	54	55	56	57	58	59	60
		0V	0V	0V	5.0V	4.7V	0V	0V	5.0V	0V	4.8V	0.6V	0V	3.4V	−7.0V	−6.8V	10.9V	−6.8V	−6.5V	−1.2V	−3.5V
		61	62	63	64	65	66	67	68	69	70	71	72	73	74	75	76	77	78	79	80
		−3.4V	−27.5V	−1.5V	−3.0V	–	–	–	–	–	–	–	–	–	–	–	–	–	–	–	–

Voltage Table of Front Control P.C.Board

IC PIN NUMBERS DC VOLTAGES																					
Ref. No.	DEVICE	1	2	3	4	5	6	7	8	9	10	11	12	13	14	15	16	17	18	19	20
IC651	LC6554	4.9V	4.9V	4.9V	0V	–	–	0V	0V	0V	4.9V	4.9V	4.9V	4.9V	4.9V	5.1V	4.9V	0.1V	4.9V	4.9V	4.9V
		21	22	23	24	25	26	27	28	29	30	31	32	33	34	35	36	37	38	39	40
		0V	4.8V	0V	0V	0V	4.9V	0V	0V	0V	0V	0V	2.4V	2.4V	4.9V	4.9V	0V	0V	4.9V	0.5V	0.5V
		41	42	43	44	45	46	47	48	49	50	51	52	53	54	55	56	57	58	59	60
		0.5V	0.5V	–	–	–	–	–	–	–	–	–	0V	–	–	0V	0V	4.8V	0V	0V	0V
		61	62	63	64	65	66	67	68	69	70	71	72	73	74	75	76	77	78	79	80
		0V	4.9V	0V	4.9V	–	–	–	–	–	–	–	–	–	–	–	–	–	–	–	–
IC652	L78LR05	15.1V	6.6V	0V	4.9V	4.9V	–	–	–	–	–	–	–	–	–	–	–	–	–	–	–
IC653,654	LC7566	5.0V	−21.2V	−24.3V	−24.3V	−24.3V	−24.3V	−24.3V	−24.3V	−24.3V	−24.3V	−24.3V	−24.3V	−21.2V	−24.3V	–	–	–	–	0V	4.0V
		21	22	23	24	25	26	27	28	29	30	31	32	33	34	35	36	37	38	39	40
		0V	0V	0V	0V	0V	0V	0V	0V	0V	0V	0V	0V	0V	−21.5V	−21.7V	−21.7V	−21.7V	−21.7V	−21.7V	−21.7V
		41	42	43	44	45	46	47	48	49	50	51	52	53	54	55	56	57	58	59	60
		−21.7V	5.0V	–	–	–	–	–	–	–	–	–	–	–	–	–	–	–	–	–	–
IC655,656	BA14741	0V	0V	0V	9.4V	0V	0V	0V	0V	0V	0V	−9.5V	0V	0V	0V	–	–	–	–	–	–
IC657,658	BA14741	0V	0V	0V	9.4V	0V	0V	0V	0V	0V	0V	−9.5V	0V	0V	0V	–	–	–	–	–	–

Voltage Table of Deck/Function P.C.Board

IC PIN NUMBERS DC VOLTAGES																					
Ref. No.	DEVICE	1	2	3	4	5	6	7	8	9	10	11	12	13	14	15	16	17	18	19	20
IC301,302	LA3160	1.3V	0.7V	4.2V	9.7V	0V	4.2V	0V	1.3V	–	–	–	–	–	–	–	–	–	–	–	
IC303	LC4066	7.1V	7.1V	7.1V	7.0V	0V	0V	0V	7.0V	7.0V	7.0V	7.0V	12.9V	12.9V	14.3V	–	–	–	–	–	–
IC304	LA2000	1.9V	0V	1.9V	0V	0V	0V	0.3V	0V	10.1V	–	–	–	–	–	–	–	–	–	–	–
IC305	CXA1101P	5.8V	−11.5V	5.8V	5.8V	3.9V	5.9V	0.3V	5.9V	5.9V	0.4V	5.9V	0V	1.1V	5.8V	0V	5.8V	–	–	–	–
IC306,307	TA8121AN	0V	0V	0V	0V	0V	0V	11.5V	11.5V	11.5V	0V	0V	0V	0V	0.3V	5.1V	0.6V	11.5V	0V	10.4V	0V
		21	22	23	24	25	26	27	28	29	30	31	32	33	34	35	36	37	38	39	40
		1.6V	0V	1.5V	5.9V	–	–	–	–	–	–	–	–	–	–	–	–	–	–	–	–
IC308	M50747	5.6V	0V	0V	0V	5.5V	0V	0V	0V	5.6V	0V	5.5V	0V	0V	0V	0V	0V	0V	0V	5.5V	5.6V
		21	22	23	24	25	26	27	28	29	30	31	32	33	34	35	36	37	38	39	40
		5.5V	0V	5.5V	0V	0V	5.5V	0V	5.5V	2.3V	2.1V	2.4V	0V	5.6V	5.6V	5.6V	5.6V	5.6V	5.6V	5.6V	5.6V
		41	42	43	44	45	46	47	48	49	50	51	52	53	54	55	56	57	58	59	60
		5.5V	5.5V	5.5V	5.5V	5.6V	5.5V	5.5V	0V	0V	0V	5.5V	0V	0V	0V	0V	5.6V	5.5V	5.5V	0V	0V
		61	62	63	64	65	66	67	68	69	70	71	72	73	74	75	76	77	78	79	80
		0V	0V	0V	0V	–	–	–	–	–	–	–	–	–	–	–	–	–	–	–	–
IC309	LC4001B	5.5V	5.5V	0V	5.6V	0V	0V	0V	0V	0V	5.6V	0V	5.6V	5.5V	5.6V	–	–	–	–	–	–
IC310	LC4081B	0V	0V	0.1V	0V	0V	0V	0V	0V	0V	0.1V	0V	0V	0V	4.9V	–	–	–	–	–	–
IC311	UPC1330	0V	0V	0V	0V	0V	13.0V	0V	0V	0V	–	–	–	–	–	–	–	–	–	–	–
IC312	LA6458S	15.8V	0V	0V	0V	−15.9V	0V	0V	0V	15.9V	–	–	–	–	–	–	–	–	–	–	–
IC313	LA6458S	16.0V	0V	0V	0V	−16.0V	0V	0V	0V	16.0V	–	–	–	–	–	–	–	–	–	–	–
IC314	LA6458S	16.0V	0V	0V	0V	−16.0V	0V	0V	0V	16.0V	–	–	–	–	–	–	–	–	–	–	–
IC315	LA6458S	15.9V	0V	0V	0V	−16.0V	0V	0V	0V	15.9V	–	–	–	–	–	–	–	–	–	–	–
IC316	LC7823	0V	0V	0V	0V	0V	0V	0V	0V	0V	0V	0V	−17.1V	0V	0V	0V	0V	0V	16.9V	17.0V	0V
		21	22	23	24	25	26	27	28	29	30	31	32	33	34	35	36	37	38	39	40
		0V	–	–	–	–	–	–	–	–	0V	–	–	–	–	–	–	–	–	–	–
IC317	LC7823	0V	0V	0V	0V	0V	0V	0V	0V	0V	0V	0V	−17.1V	0V	0V	0V	0V	17.1V	16.9V	17.1V	0V
		21	22	23	24	25	26	27	28	29	30	31	32	33	34	35	36	37	38	39	40
		0V	0V	0V	0V	0V	0V	0V	0V	0V	0V	–	–	–	–	–	–	–	–	–	–

TRANSISTOR DC VOLTAGES														
Ref. No.	DEVICE	B	C	E	Ref. No.	DEVICE	B	C	E	Ref. No.	DEVICE	B	C	E
Q301	2SC536	0.6V	0V	0V	Q328	2SC536	−0.3V	0V	0V	Q356	2SC3400	0V	14.4V	0V
Q302	2SC536	0.6V	0V	0V	Q329	2SC536	−0.3V	0V	0V	Q357	2SC536	0V	5.5V	0V
Q303	2SD1012	0.6V	0V	0V	Q330	2SC536	−0.3V	0V	0V	Q358	2SC536	0.7V	0V	0V
Q304	2SD1012	0.6V	0V	0V	Q333	2SD1012	0.6V	0V	0V	Q359	2SD734	6.2V	11.5V	5.6V
Q305	2SD1012	0.6V	0V	0V	Q334	2SD1012	0.6V	0V	0V	Q360	2SC3400	0V	14.4V	0V
Q306	2SD1012	0.6V	0V	0V	Q335	2SD1012	0.7V	0V	0V	Q361	2SA984	14.5V	0V	14.5V
Q307	2SC536	0V	8.0V	0V	Q336	2SD1012	0.7V	0V	0V	Q362	2SC3400	14.4V	0V	0V
Q308	2SA1346	14.4V	0V	14.5V	Q337	2SC536	1.2V	4.7V	0.6V	Q363	2SA984	0V	0V	0V
Q309	2SC3400	0V	14.4V	0V	Q338	2SC536	1.2V	5.0V	0.6V	Q364	2SC3400	0V	0V	0V
Q310	2SC536	0V	12.9V	0V	Q339	2SC3400	8.3V	0V	0V	Q365	2SA984	0V	0V	0V
Q311	2SC3400	0V	12.9V	0V	Q340	2SC3400	8.3V	0V	0V	Q366	2SC2274	0V	0V	0V
Q312	2SC536	0V	0V	0V	Q341	2SC3400	0V	0V	0V	Q367	2SC3400	0V	11.0V	0V
Q313	2SC536	0V	0V	0V	Q342	2SC3400	0V	0V	0V	Q368	2SA808	11.0V	11.5V	11.4V
Q314	2SC3400	0V	0.6V	0V	Q343	2SC3400	0V	0V	0V	Q369	2SC3400	0V	11.4V	0V
Q315	2SC3400	0V	0V	0V	Q344	2SC3400	0V	0V	0V	Q370	2SB808	11.4V	11.5V	11.5V
Q317	2SC3400	0V	0V	0V	Q345	2SC3400	14.4V	0V	0V	Q371	2SA608	4.9V	5.5V	5.5V
Q318	2SC3400	0V	0V	0V	Q346	2SC3400	14.4V	0V	0V	Q372	2SD1012	0V	5.6V	0V
Q319	2SC3400	5.2V	0V	0V	Q347	2SA1346	0V	14.5V	14.5V	Q373	2SD1012	0V	5.5V	0V
Q320	2SC3400	5.2V	0V	0V	Q348	2SC3400	5.6V	0V	0V	Q374	2SA1346	14.4V	0V	14.4V
Q321	2SC3400	13.8V	0V	0V	Q349	2SA1346	0V	14.4V	0V	Q375	2SC3400	0V	14.4V	0V
Q322	2SC3400	13.8V	0V	0V	Q350	2SC3400	5.6V	0V	0V	Q376	2SA1346	0V	14.4V	14.5V
Q323	2SC536	6.4V	12.1V	5.8V	Q351	2SA1346	14.4V	−0.4V	14.5V	Q377	2SC3400	5.5V	0V	0V
Q324	2SC536	6.4V	0V	5.8V	Q352	2SC3400	0V	14.4V	0V	Q378	2SC3400	0V	8.3V	0V
Q325	2SC536	0V	0V	0V	Q353	2SA1346	14.4V	0V	14.5V	Q379	2SC3400	5.0V	0V	0V
Q326	2SC536	0V	0V	0V	Q354	2SC3400	0V	0V	0V					
Q327	2SC536	−0.3V	0.2V	0V	Q355	2SA1346	14.4V	0V	14.5V					

SUB TRANS P.C.BOARD
(BOTTOM VIEW)

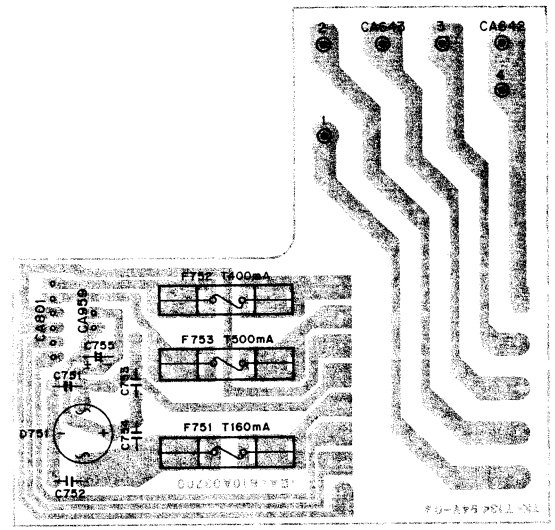

VOLUME P.C.BOARD
(BOTTOM VIEW)

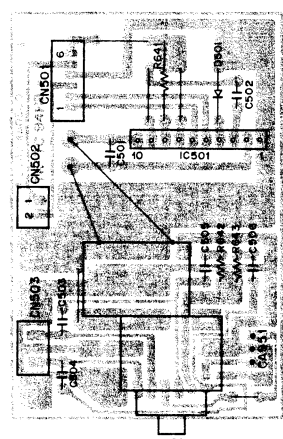

IC PIN NUMBERS DC VOLTAGES										
Ref. No.	DEVICE	1	2	3	4	5	6	7	8	9	10
IC501	LB1641	0.5V	0.5V	0.7V	0.4V	0V	0V	11.6V	11.6V	0.7V	0.5V

PLAYER POWER P.C.BOARD
(BOTTOM VIEW)

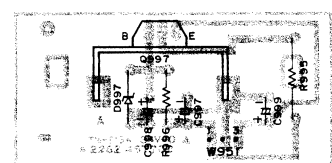

TRANSISTOR DC VOLTAGES				
Ref. No.	DEVICE	B	C	E
Q997	2SD1913	12.2V	24.0V	11.9V

WIRING DIAGRAM (CD Player Section)

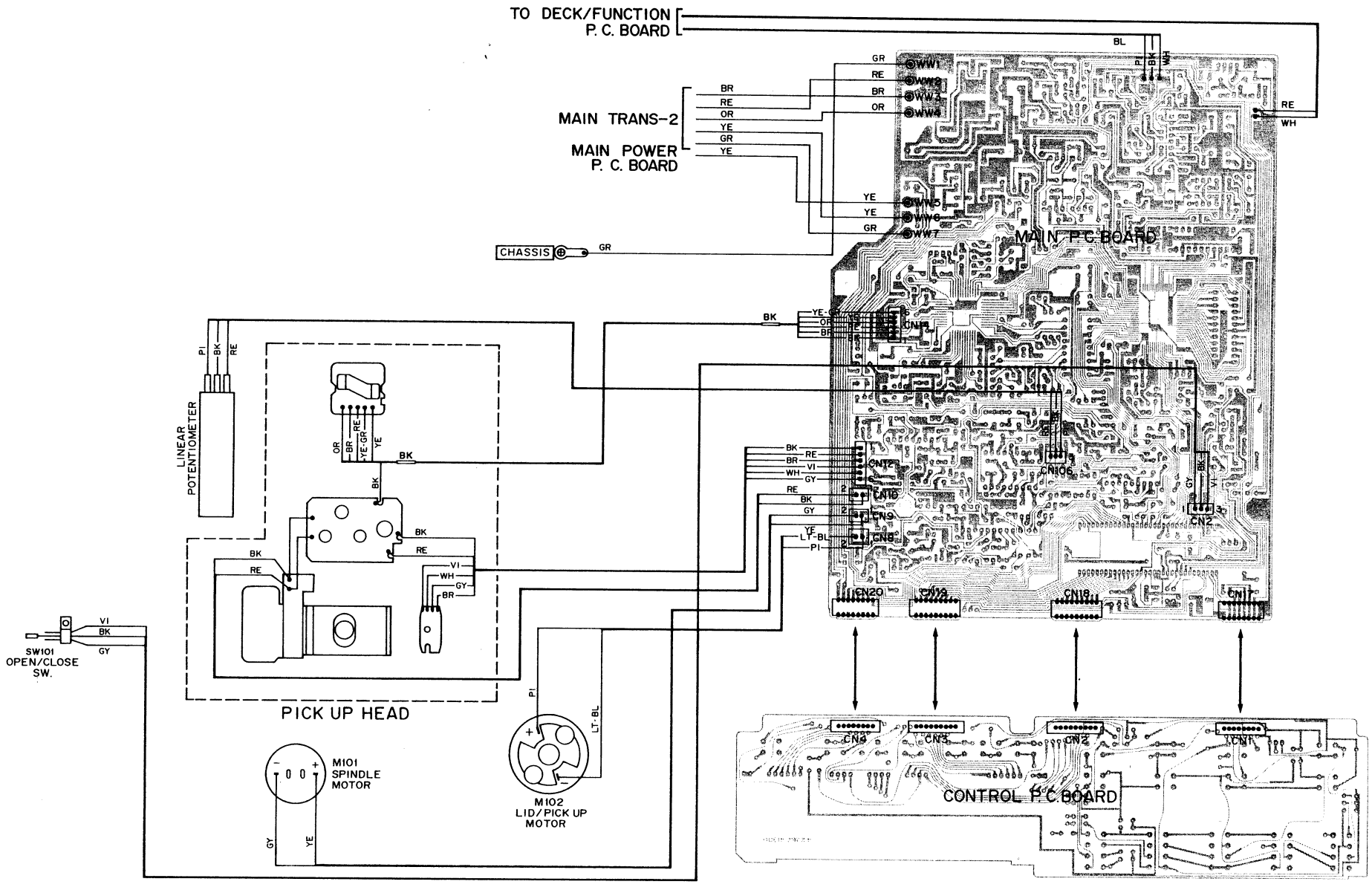

WIRING DIAGRAM (Power Main Section)

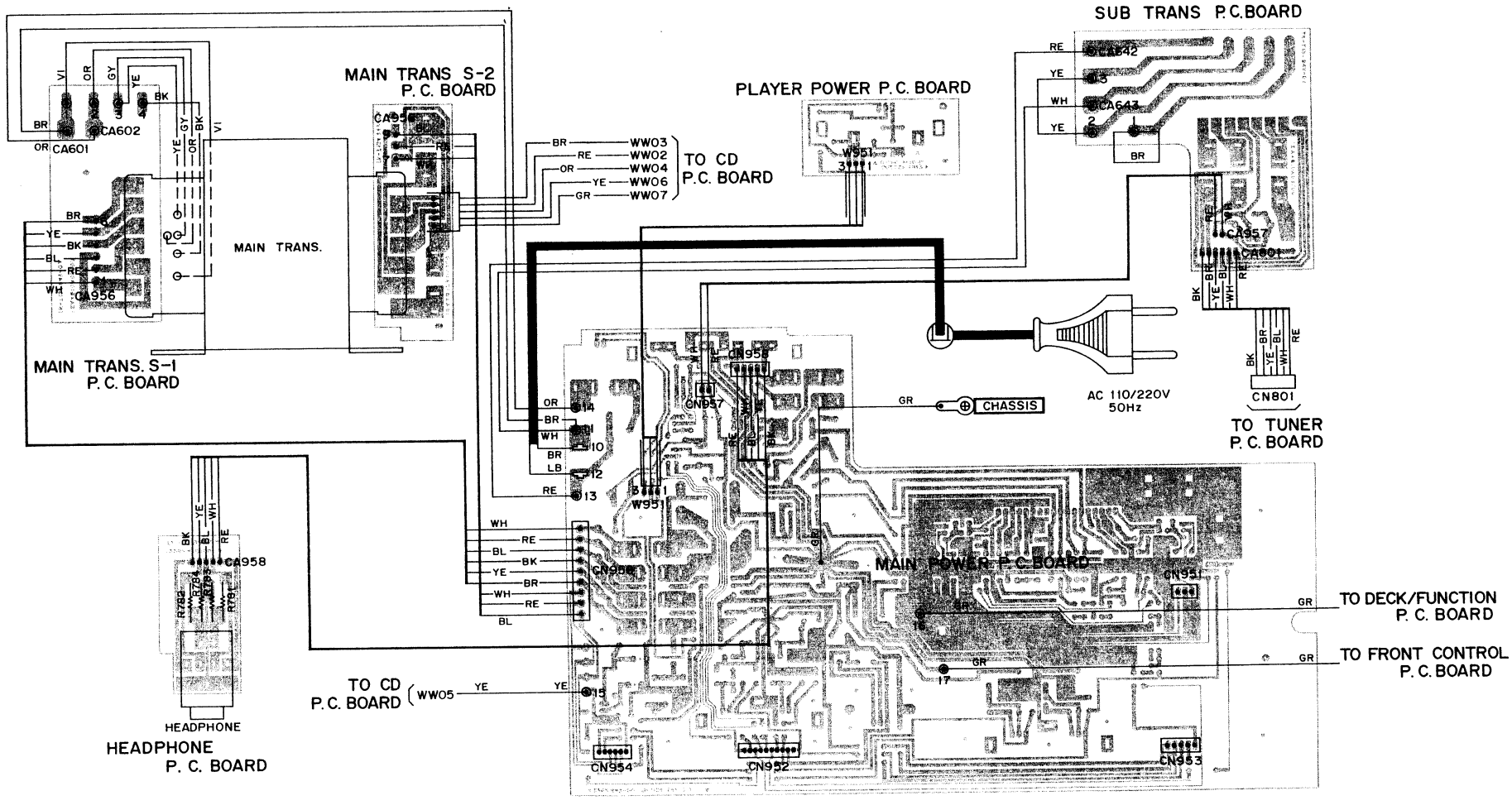

WIRING DIAGRAM (Main Unit Section)

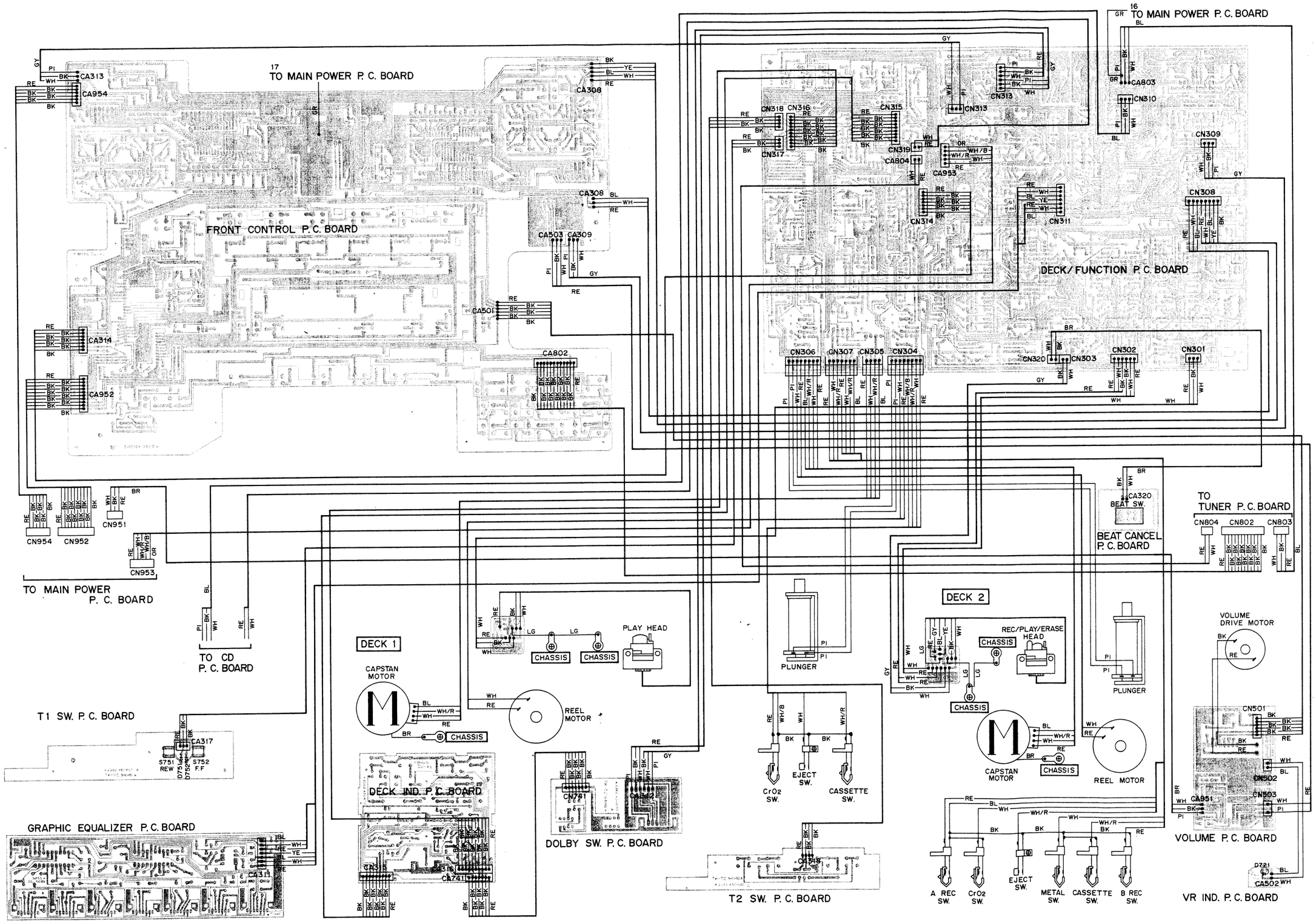

SCHEMATIC DIAGRAM (Tuner Section)

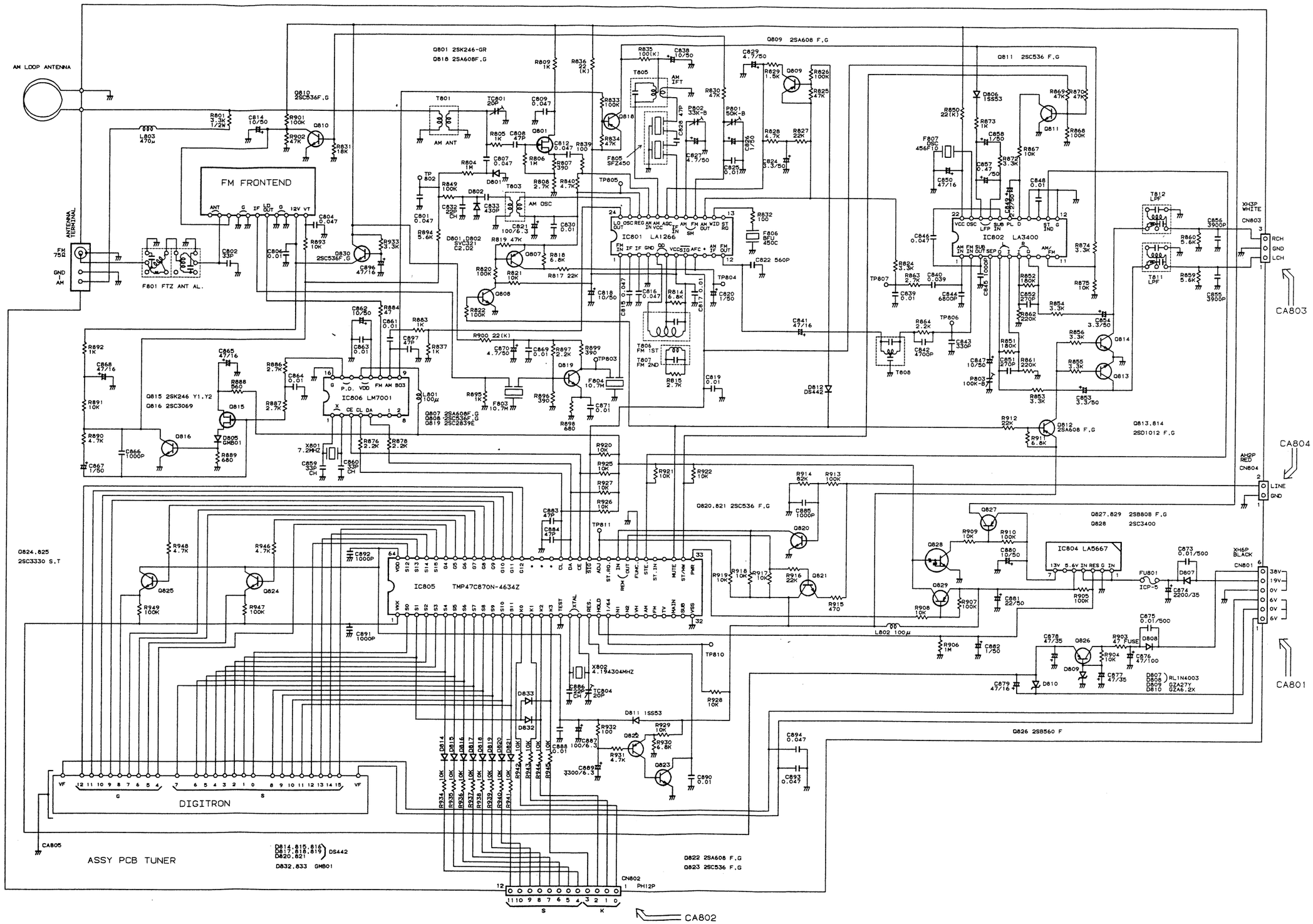

SCHEMATIC DIAGRAM (Deck/Function/Front Control Section)

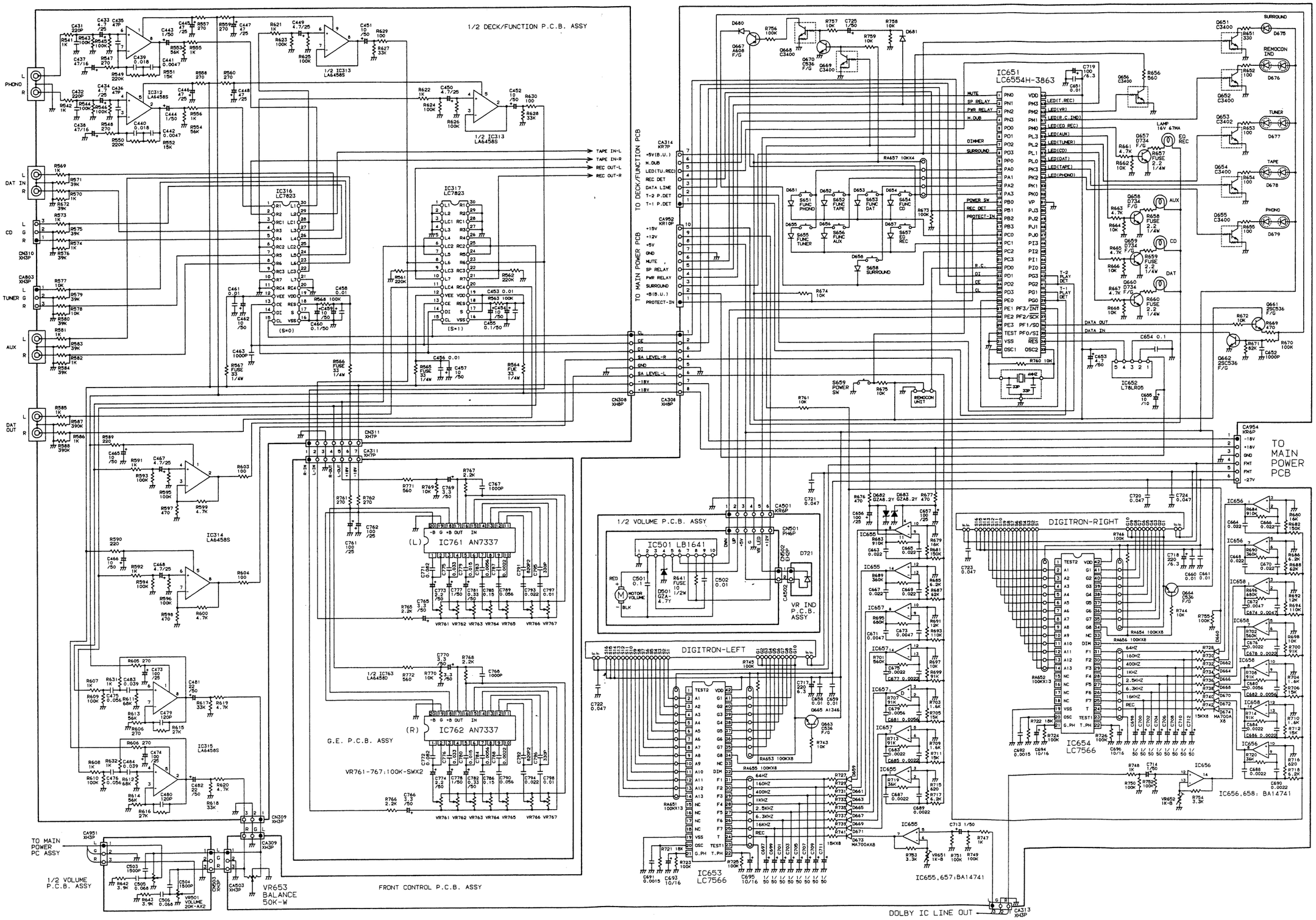

SCHEMATIC DIAGRAM (Deck/Function Section)

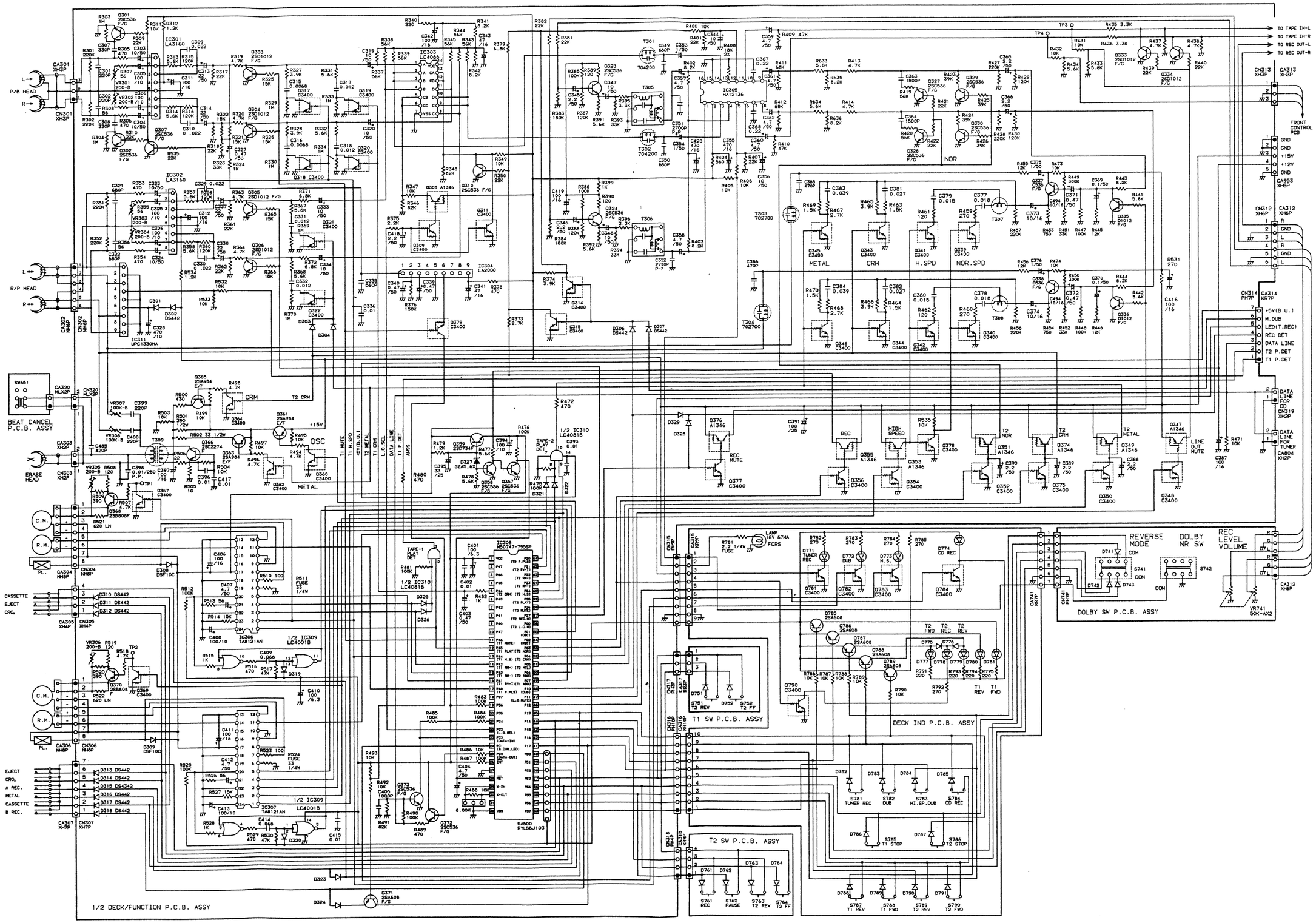

SCHEMATIC DIAGRAM (CD Player Section)

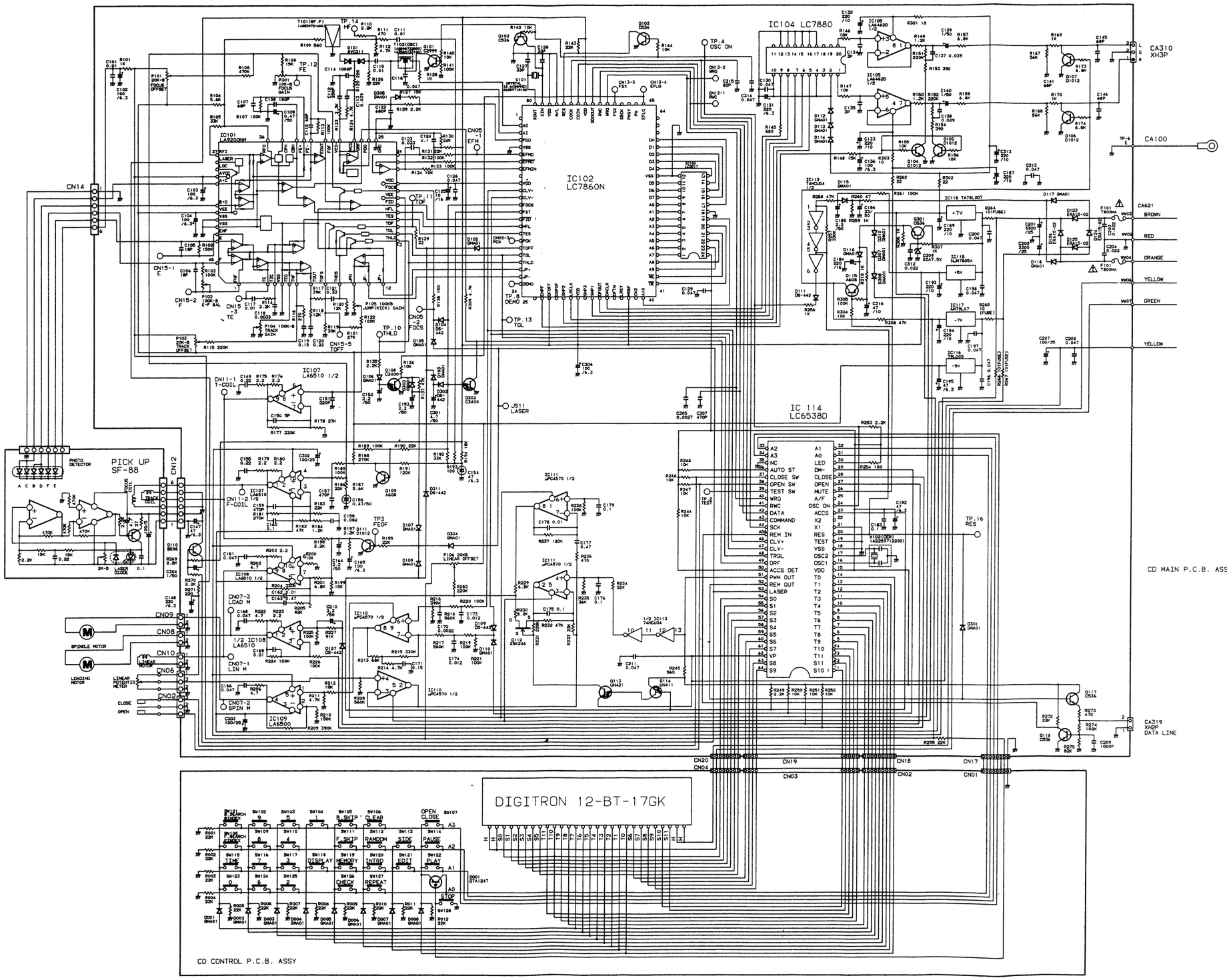

SCHEMATIC DIAGRAM (Main Power Section)

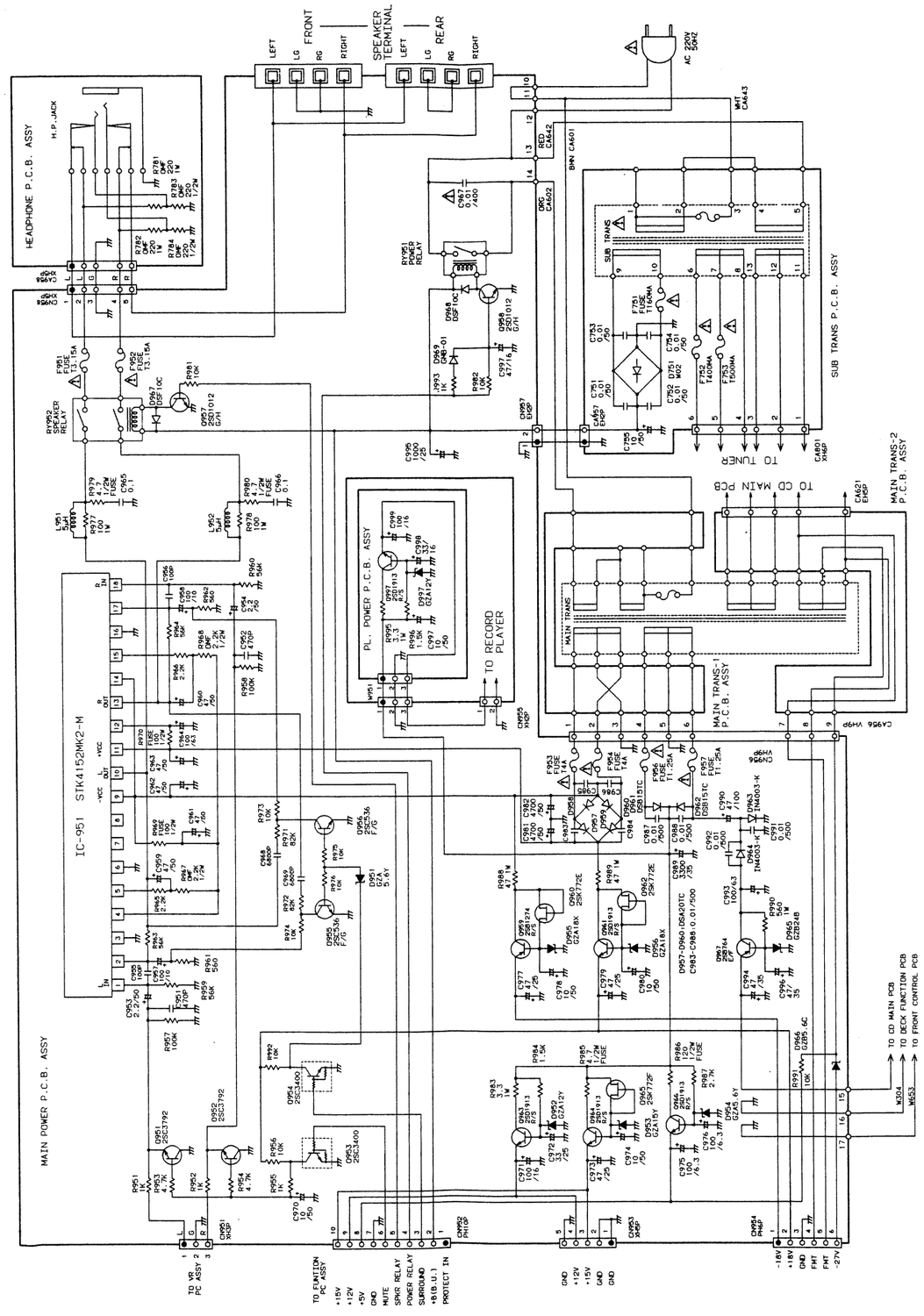

IC BLOCK DIAGRAM

LA1266 BLOCK DIAGRAM

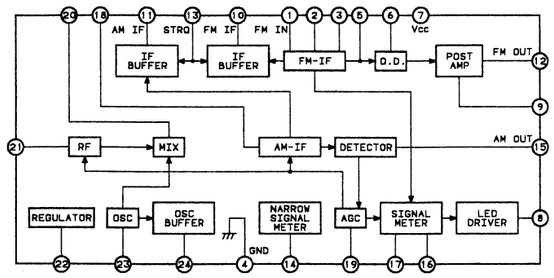

LA3400 BLOCK DIAGRAM

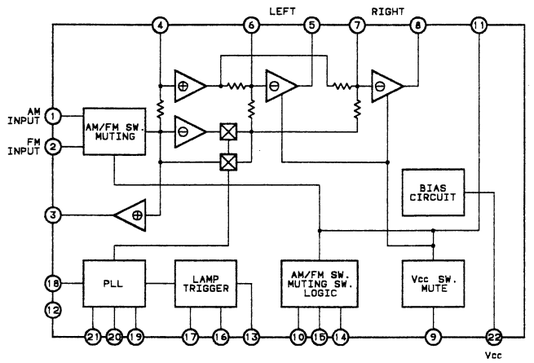

TMP47C870N-4634Z BLOCK DIAGRAM

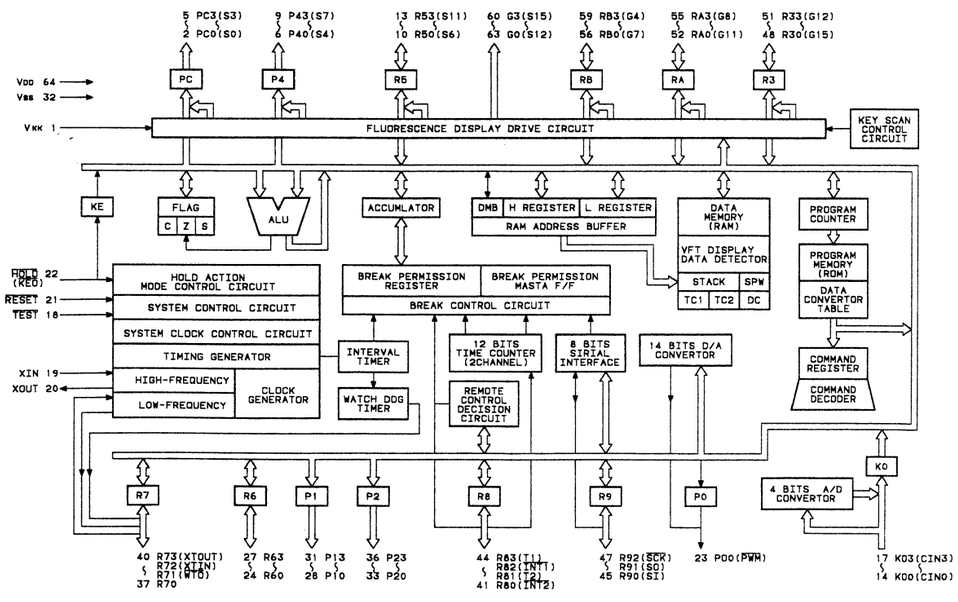

IC BLOCK DIAGRAM (Continued)

LM7001 BLOCK DIAGRAM

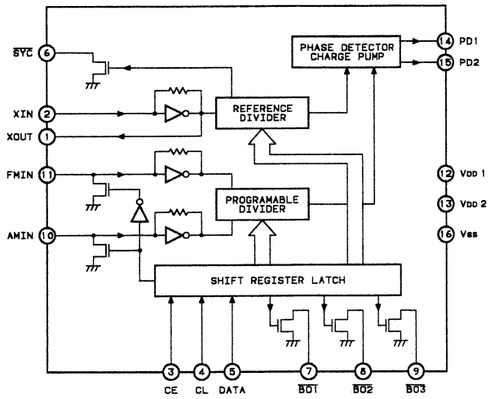

LA5667 BLOCK DIAGRAM

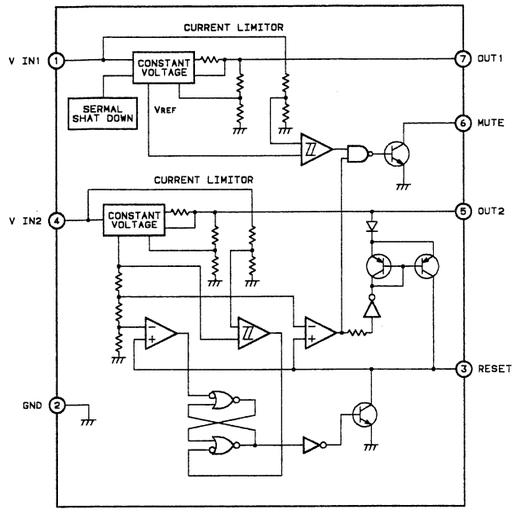

LA3160 BLOCK DIAGRAM

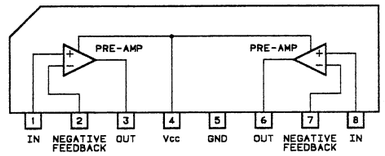

M50747-795SP BLOCK DIAGRAM

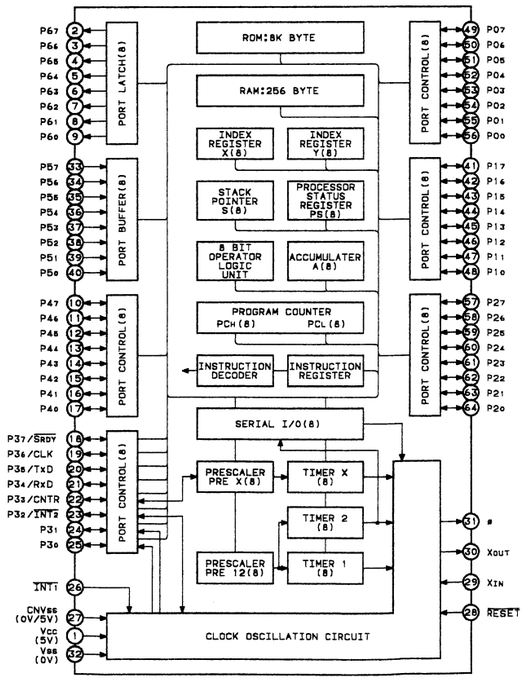

LC4066B BLOCK DIAGRAM

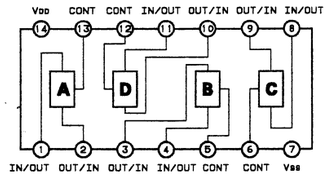

LA2000 BLOCK DIAGRAM

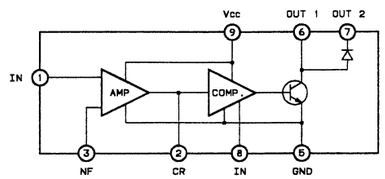

IC BLOCK DIAGRAM (Continued)

HA12136 BLOCK DIAGRAM

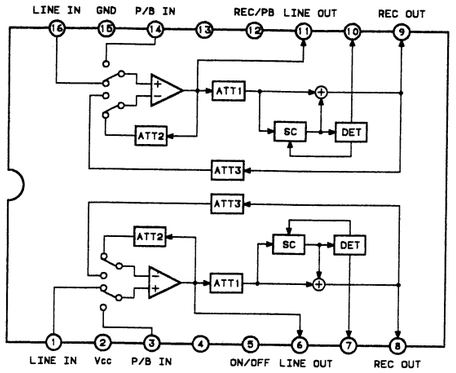

TA8121AN BLOCK DIAGRAM

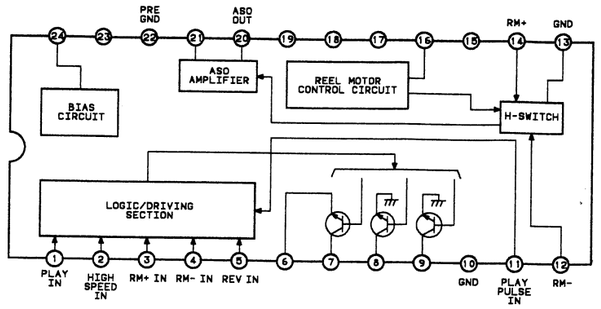

LC7823 BLOCK DIAGRAM

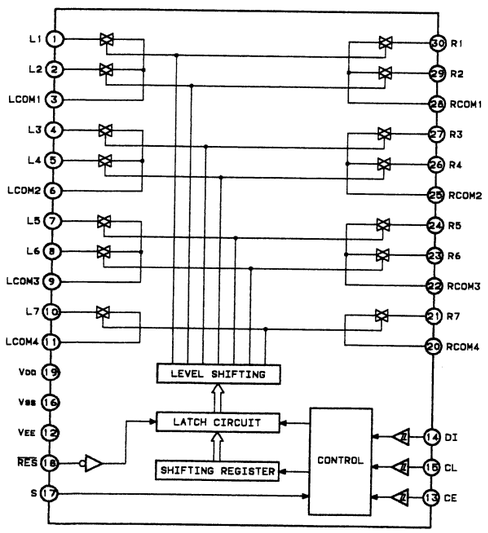

LA6458S BLOCK DIAGRAM

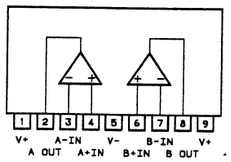

AN7337 BLOCK DIAGRAM

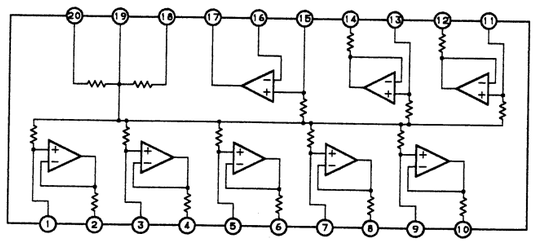

LA5537 BLOCK DIAGRAM

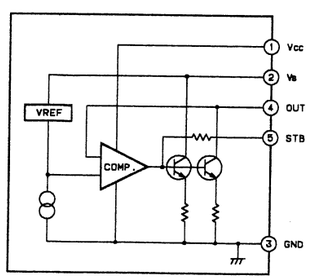

BA14741 BLOCK DIAGRAM

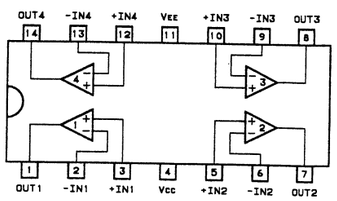

IC BLOCK DIAGRAM (Continued)

LB1641 BLOCK DIAGRAM

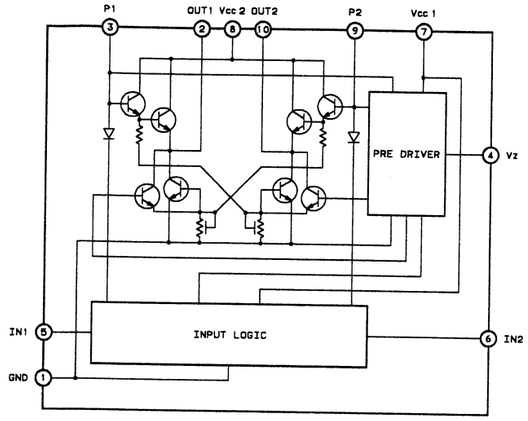

LC7880 BLOCK DIAGRAM

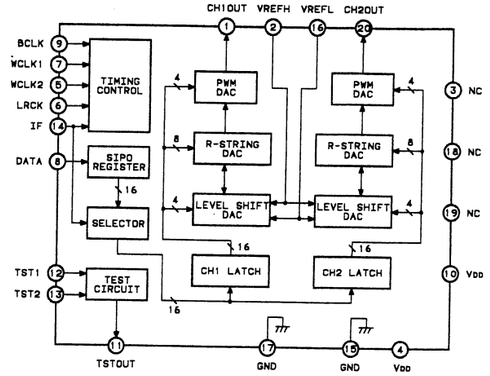

TA79L005P BLOCK DIAGRAM

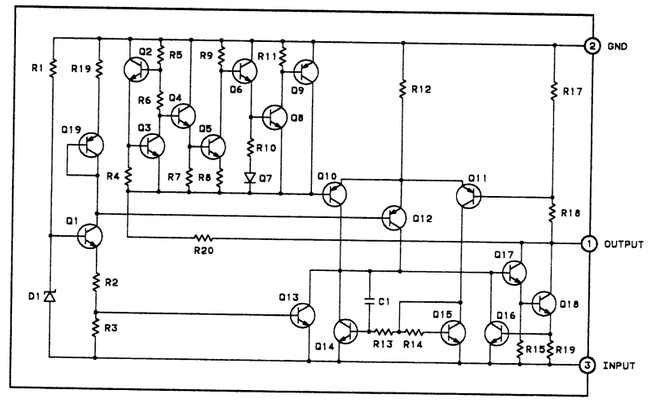

STK4152MK2-M BLOCK DIAGRAM

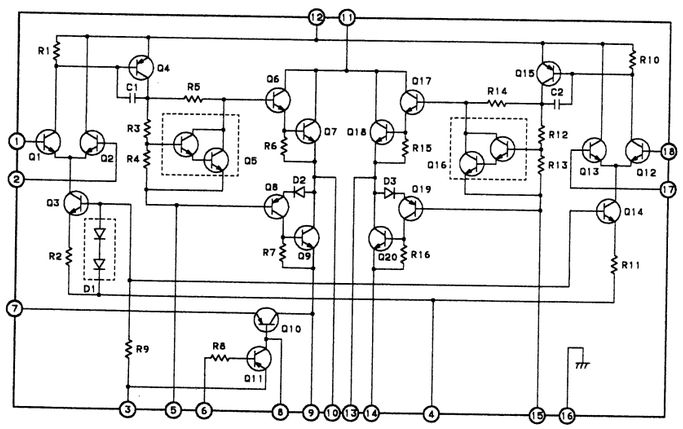

IC BLOCK DIAGRAM (Continued)

L78LR05E-MA BLOCK DIAGRAM

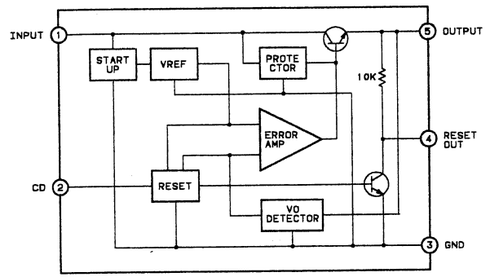

AN79L07 BLOCK DIAGRAM

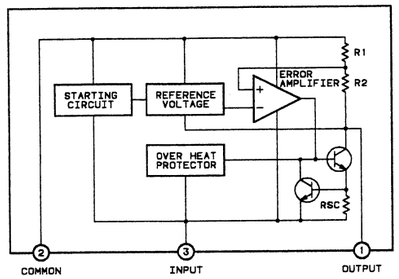

LC3517BS-15 BLOCK DIAGRAM

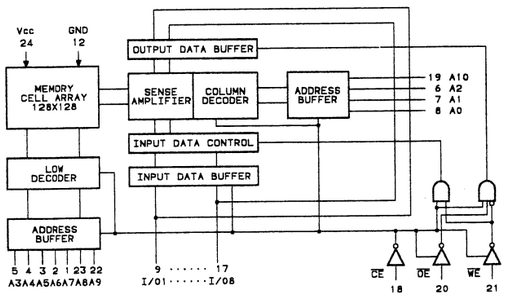

LA6500 BLOCK DIAGRAM

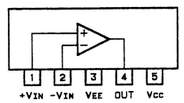

LA6462D BLOCK DIAGRAM

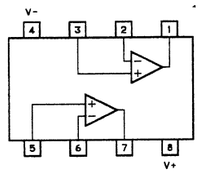

LC7860N BLOCK DIAGRAM

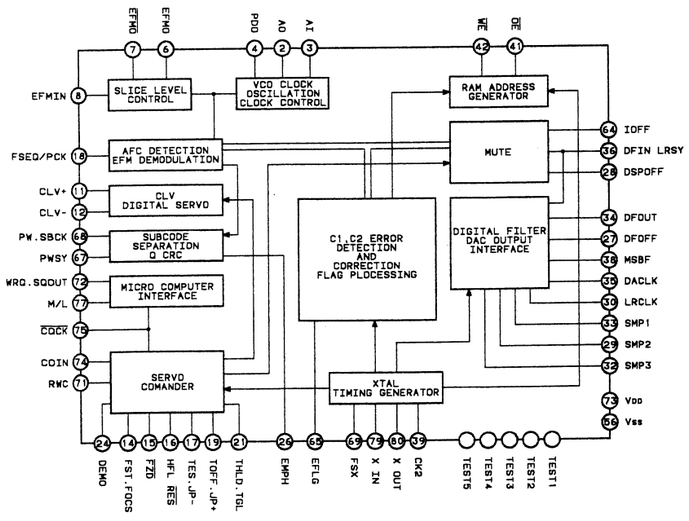

UPC4570HA BLOCK DIAGRAM

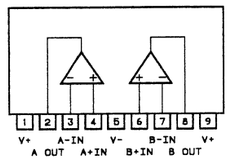

LA6510 BLOCK DIAGRAM

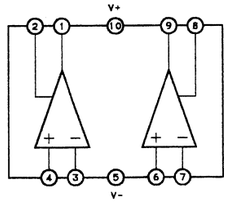

IC BLOCK DIAGRAM (Continued)

LA6393S BLOCK DIAGRAM

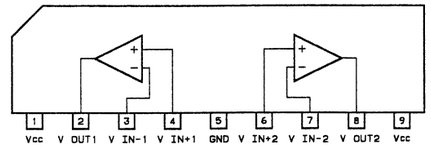

UPC1330HA BLOCK DIAGRAM

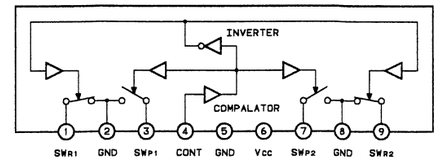

LC4081B BLOCK DIAGRAM

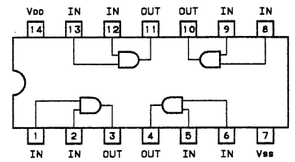

TA78L007P BLOCK DIAGRAM

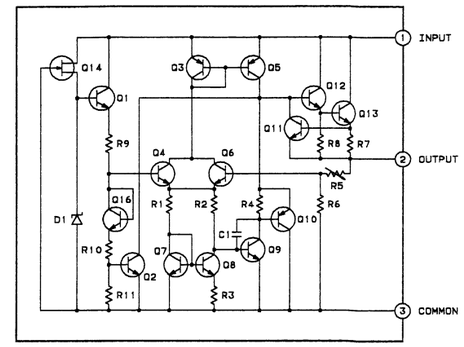

NJU74HCU04D BLOCK DIAGRAM

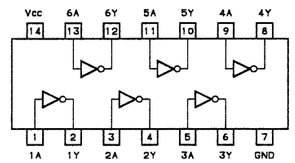

LC4001B BLOCK DIAGRAM

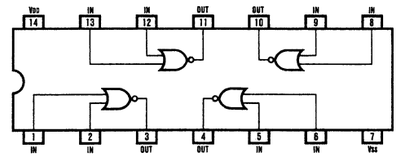

NJM7805A BLOCK DIAGRAM

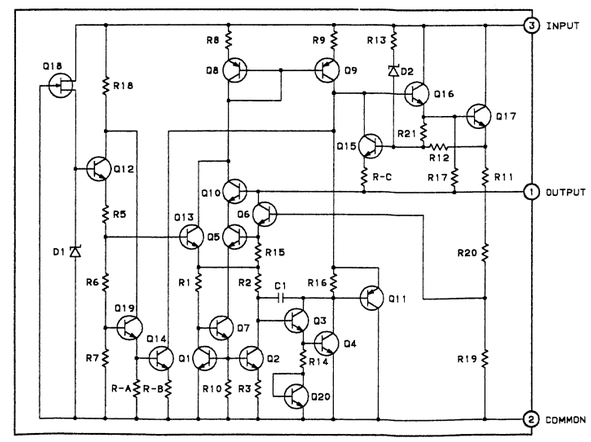

IC BLOCK DIAGRAM (Continued)

LA9200NM BLOCK DIAGRAM

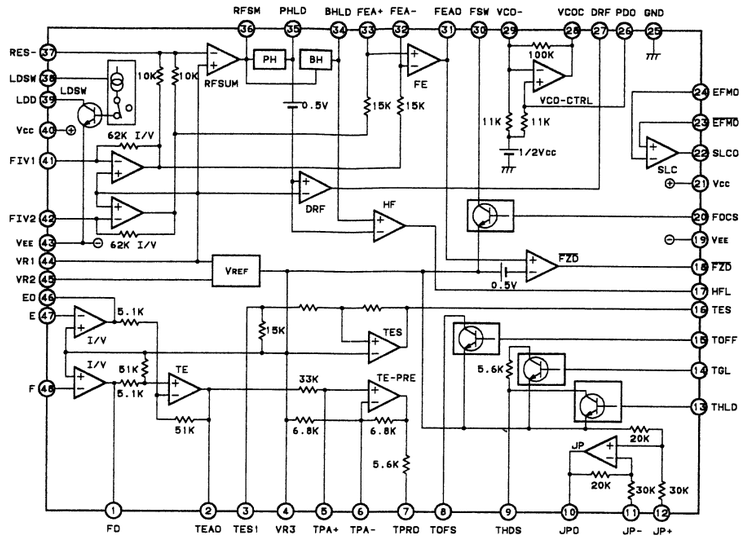

LC6538D-3843 BLOCK DIAGRAM

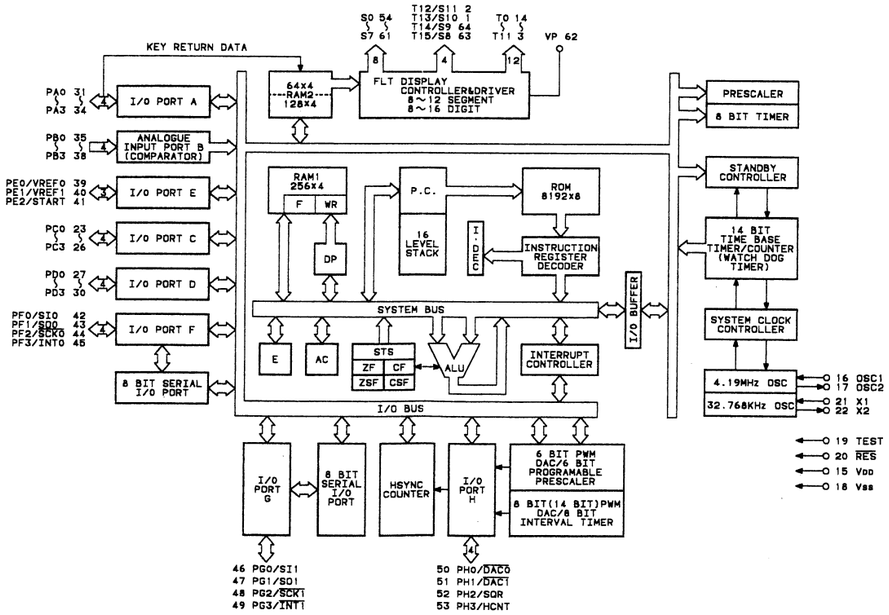

IC BLOCK DIAGRAM (Continued)

LC6554H-3863 BLOCK DIAGRAM

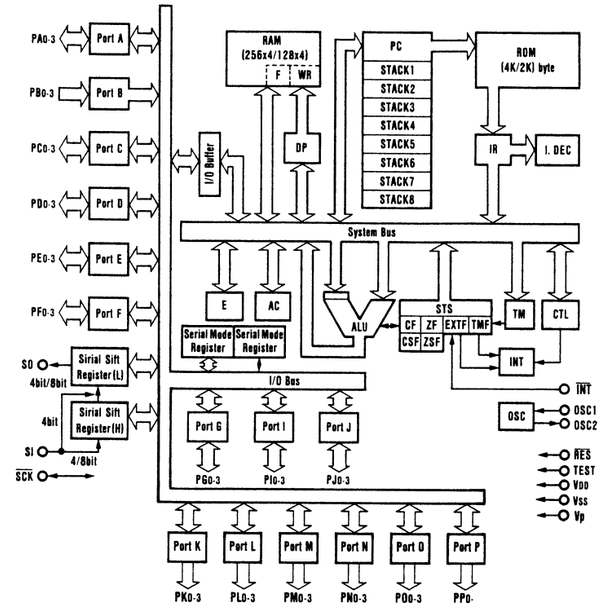

LC7566 BLOCK DIAGRAM

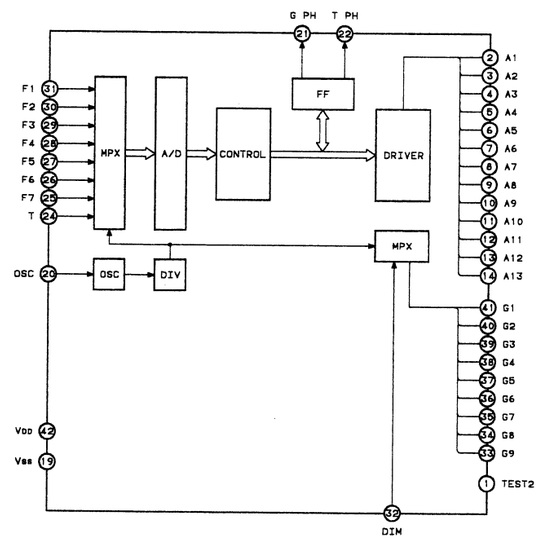

M-CON PORT ASSIGNMENTS
(LC651 LC6554H)

Signal Name	I/O	Function	Active H/L	Port Name	Pin No.
MUTE	OUT	Audio Mute Output	L	PN0	1
SP.RELAY	OUT	Speaker Relay Control	H	PN1	2
POWER RLY	OUT	System Power Supply Control	H	PN2	3
DECK CONT.	OUT	Manual Dubbing Control	H	PN3	4
				PO0	5
				PO1	6
DIMMER	OUT	Dimmer Control	H	PO2	7
PEAK HOLD	OUT	Peak Hold Control	H	PO3	8
DISPLAY	OUT	Display Control	H	PP0	9
KEY A	IN	Key Matrix	L	PA0	10
KEY B	IN	Key Matrix	L	PA1	11
KEY C	IN	Key Matrix	L	PA2	12
KEY D	IN	Key Matrix	L	PA3	13
POWER SW	IN	Power ON/OFF Switch	L	PB0	14
REC DET	IN	Record Detect Input	L	PB1	15
PROTECT IN	IN	Protect Detect Input	L	PB2	16
				PB3	17
KEY 1	OUT	Key Matrix Timing	L	PC0	18
KEY 2	OUT	Key Matrix Timing	L	PC1	19
KEY 3	OUT	Key Matrix Timing	L	PC2	20
KEY 4	OUT	Key Matrix Timing	L	PC3	21
REMOCON	IN	Remote Control	L	PD0	22
DI	OUT	Analog Switch Data Output	H	PD1	23
CE	OUT	Analog Switch Chip Enable Output	H	PD2	24
CL	OUT	Analog Switch Clock Output	H	PD3	25
		Connect the PF3		PE0	26
VOLUME DOWN	OUT	Motor Drive Volume (Down)	H	PE1	27
VOLUME UP	OUT	Motor Drive Volume (UP)	H	PE2	28
FCRS CONT	OUT	FCRS Control	H	PE3	29
				TEST	30
				VSS	31
				OSC1	32
				OSC2	33
				RES	34
DATA IN	IN	Data Input	L	PF0	35
DATA OUT	OUT	Data Output	H	PF1	36
				PF2	37
				PF3	38
TAPE1 MODE	IN	TAPE-1 FF/REW Detect	L	PG0	39
TAPE1 MODE	IN	TAPE-1 FF/REW Detect	L	PG1	40
TAPE2 MODE	IN	TAPE-2 FF/REW Detect	L	PG2	41
TAPE2 MODE	IN	TAPE-2 FF/REW Detect	L	PG3	42
				P10	43
				P11	44
				P12	45
				P13	46

IC & TRANSISTOR LEAD IDENTIFICATION

TRANSISTOR	FRONT VIEW	BOTTOM VIEW	TRANSISTOR	FRONT VIEW	BOTTOM VIEW
2SA608 2SA984 2SB598 2SC2274 2SC3069 2SC3792 2SC536 2SD734	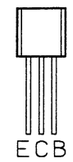	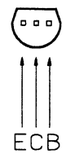	2SB560 2SB764	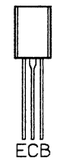	
UN411-D UN421-D	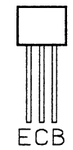	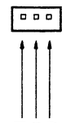	2SB1274 2SD1913	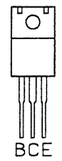	
DTA124T 2SA1346 2SA608 2SB808 2SC2839 2SC2999 2SC3330 2SC3400 2SC536 2SD1012	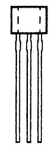		2SK246	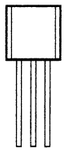	
2SK772	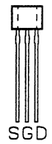				

TERMINAL NAME

B → BASE
C → COLLECTOR
E → EMITTER

S → SOURCE
G → GATE
D → DRAIN

LA2000 FRONT/SIDE VIEWS
LA6393S FRONT/SIDE VIEWS
LA6458S FRONT/SIDE VIEWS

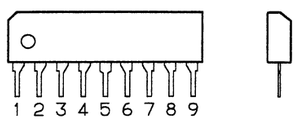

UPC1330HA FRONT/SIDE VIEWS

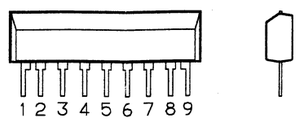

LB1641 FRONT/SIDE VIEWS

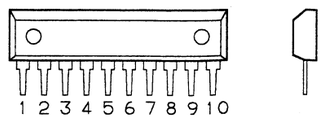

LA3160 FRONT/SIDE VIEWS

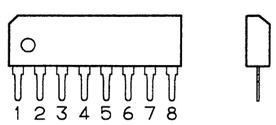

UPC4570HA FRONT/SIDE VIEWS

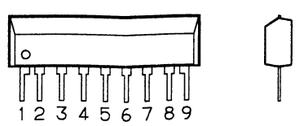

LA5537 FRONT/SIDE VIEWS

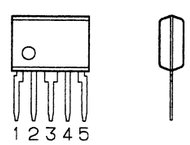

IC & TRANSISTOR LEAD IDENTIFICATION (Continued)

LA5667 FRONT/SIDE VIEWS

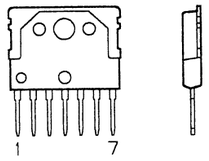

STK4152MK2-M FRONT/SIDE VIEWS

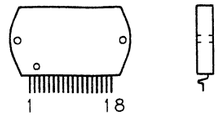

LA6510 FRONT/SIDE VIEWS

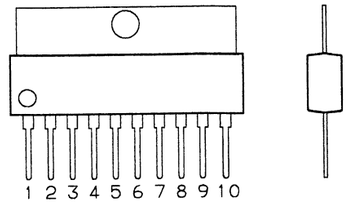

LA6462D TOP VIEW

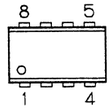

LC4001B TOP VIEW
LC4066B TOP VIEW
LC4081B TOP VIEW
NJU74HCU04D TOP VIEW

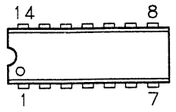

BA14741 TOP VIEW

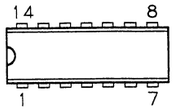

LM7001 TOP VIEW

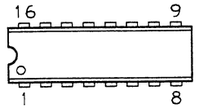

AN7337 TOP VIEW
LC7880 TOP VIEW

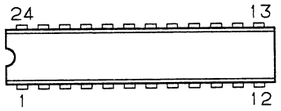

LA3400 TOP VIEW

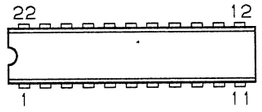

TA8121AN TOP VIEW

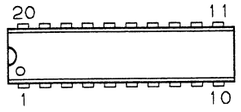

LA1266 TOP VIEW
LC3517BS-15 TOP VIEW

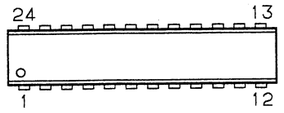

LC7823 TOP VIEW

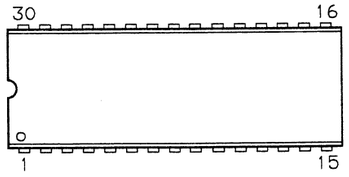

LC7566 TOP VIEW

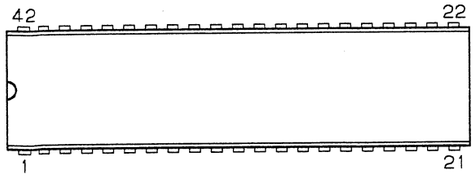

M50747-795SP TOP VIEW

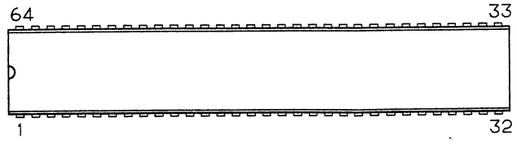

LC6538D-3843 TOP VIEW
LC6554H-3863 TOP VIEW

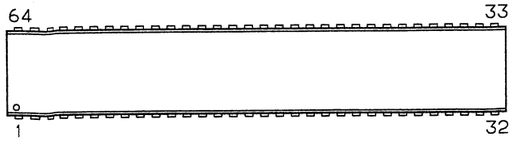

TA78L007P TOP/SIDE VIEWS
TA79L005P TOP/SIDE VIEWS

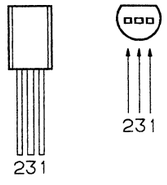

IC & TRANSISTOR LEAD IDENTIFICATION (Continued)

LA9200NM TOP/SIDE VIEWS

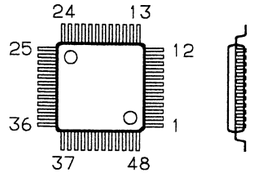

LC7860N TOP/SIDE VIEWS

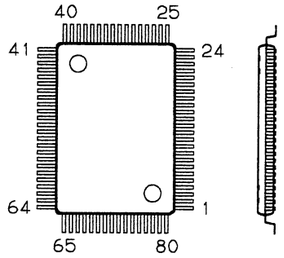

AN79L07 TOP/SIDE VIEWS

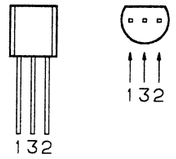

NJM7805A TOP/SIDE VIEWS

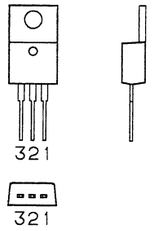
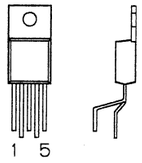
LA6500 TOP/SIDE VIEWS